OptiFlex™ BACnet Building Controller (part# OF1628)

Technical Instructions

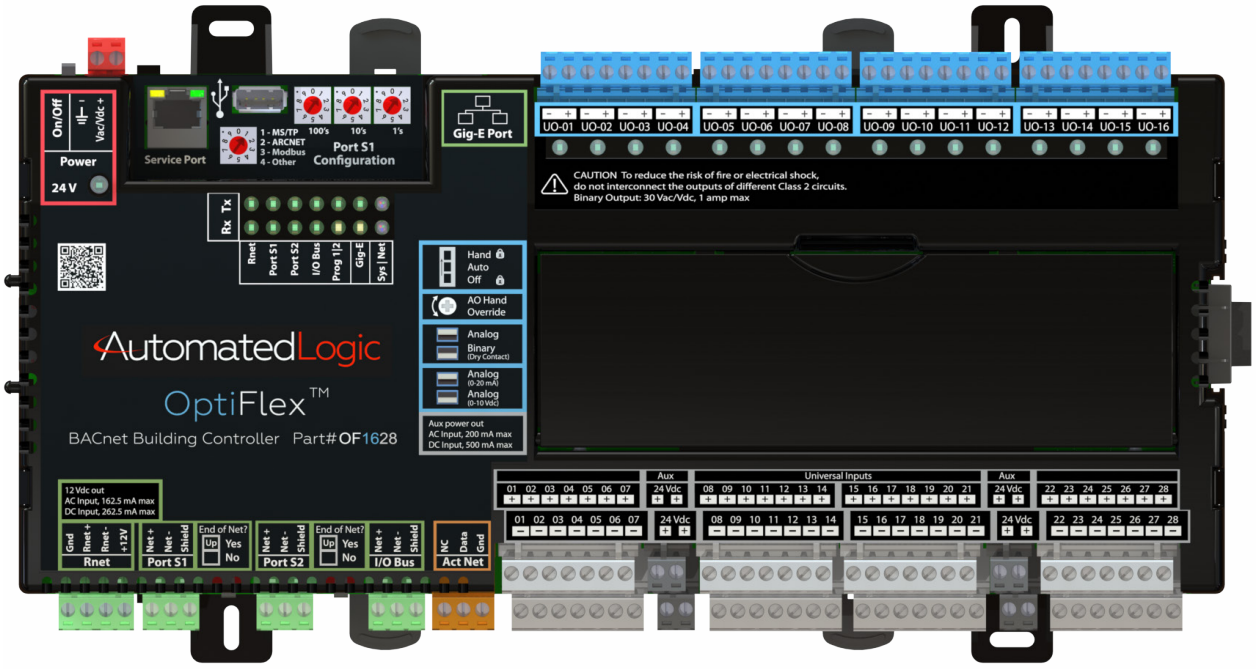

1150 Roberts Boulevard, Kennesaw, Georgia 30144
770-429-3000 Fax 770-429-3001 | www.automatedlogic.com

AutomatedLogic

Rev. 3/31/2020

⚠ Verify that you have the most current version of this document. Go to **https://accounts.automatedlogic.com**, then select **Support** > **Download** > **Documents**.

Important changes are listed in **Document revision history** at the end of this document.

Contents

What is the OptiFlex™ BACnet Building Controller (part# OF1628)?

The OptiFlex™ BACnet Building Controller (part# OF1628) is a BACnet controller that:

- Provides BACnet routing between any supported BACnet communication types
- Supports I/O expanders
- Provides 28 universal inputs and 16 universal outputs
- Runs control programs
- Can have two BACnet/IP networks communicating on the Gig-E port
- Can serve as a BACnet Broadcast Management Device (BBMD) on each of the BACnet/IP networks
- Supports Foreign Device Registration (FDR)
- Supports DHCP IP addressing
- Has built-in network diagnostic capture functionality for troubleshooting
- Has network statistics that can be viewed numerically or as trend graphs
- Supports Rnet devices
- Supports up to 16 OptiPoint™ Smart Valves on the Act Net port
- Works with the WebCTRL® v6.5 or later system with the latest cumulative patch
- Can serve as a gateway that can act as a:
  - Master or slave on a Modbus serial network
  - Server or client on a Modbus TCP/IP network

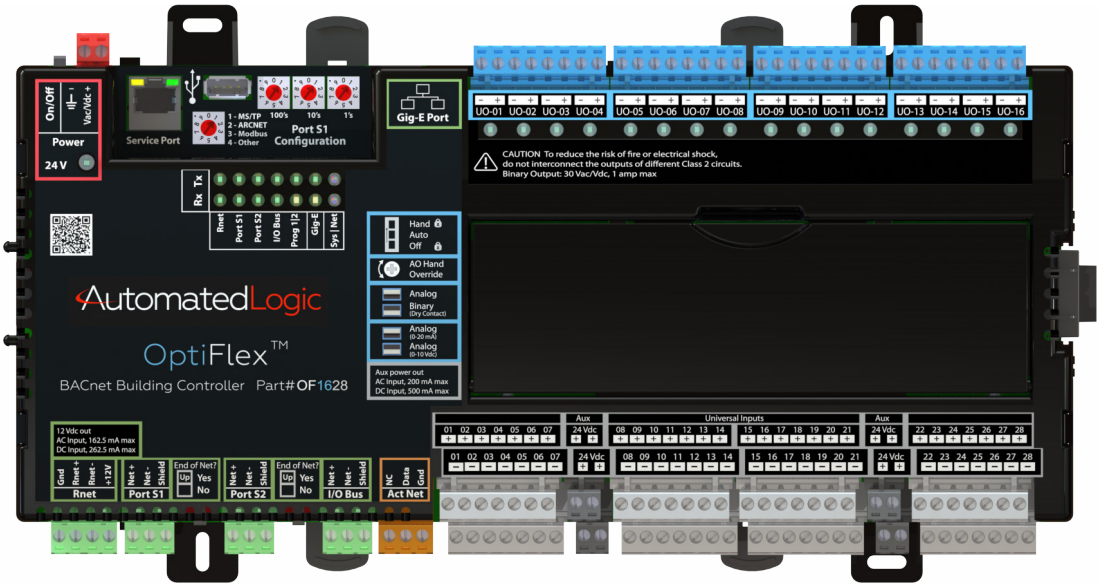

The OF1628 has 4 physical ports for BACnet or Modbus communication:

Port	Port type	For routing this type of communication...	At...
Gig-E	10/100/1000 Mbps Ethernet	BACnet/IP, BACnet/Ethernet, and/or Modbus TCP/IP	10, 100, or 1000 Mbps (1 Gbps)
S1	High-speed EIA-485 port	BACnet/ARCNET or BACnet/MSTP or Modbus Serial	156 kbps 9.6 to 115.2 kbps 9.6 to 115.2 kbps
S2	Electrically isolated EIA-485 port	BACnet/MSTP or Modbus Serial	9.6 to 115.2 Kbps 9.6 to 115.2 kbps
Service Port	10/100 Mbps Ethernet HTTP/IP	BACnet/IP Service Port	10 or 100 Mbps

The OF1628 also has the following ports:

- I/O Bus port for wired FIO expanders
- I/O bus edge connector for directly-connected FIO expanders (DC only)
- Rnet port for ZS sensors, Wireless Adapter for wireless sensors, an Equipment Touch, and an OptiPoint™ interface
- USB port for recovery
- Act Net port for OptiPoint™ Smart Valves

Specifications

Driver	drv_fwex_< version >.driverx
Maximum number of control programs*	999
Maximum number of BACnet objects*	12000
Third-party BACnet integration points	1500
Third-party Modbus integration points	200

* Depends on available memory.

Power	24 Vac ±15%, 50–60 Hz, 100 VA 24 Vdc ±10%, 48 W

I/O expanders	Supports up to 9 FIO expanders
Gig-E port	10/100/1000 BaseT, full duplex, Ethernet port for BACnet/IP and/or BACnet/Ethernet, or Modbus TCP/IP communication.
Port S1	For communication with either of the following: • A BACnet ARCNET network at 156 kbps • A BACnet MS/TP network at 9600 to 115200 bps • A Modbus serial network at 9600 to 115200 bps This port's **End of Net?** switch can be set to **Yes** to terminate the network segment.
Port S2	For communication with either of the following: • A BACnet MS/TP network at 9600 to 115200 bps • A Modbus serial network at 9600 to 115200 bps This port's **End of Net?** switch can be set to **Yes** to terminate the network segment.
Rnet port	• Supports Up to 15 ZS wireless and/or ZS sensors, and one Equipment Touch or OptiPoint™ interface • Supports local connection for a laptop running the WebCTRL® application • Supplies 12 Vdc power less than or equal to 162.5 mA when the OF1628 is powered from an AC source and less than or equal to 262.5 mA when powered by a DC source. **NOTE** If the total power required by the sensors on the Rnet exceeds the power supplied by the Rnet port, use an external power source. The Wireless Adapter, Equipment Touch, or OptiPoint™ interface must be powered by an external power source. See the specifications in each device's Technical Instructions to determine the power required.
Act Net port	Supports up to 16 OptiPoint™ Smart Valves
I/O Bus port	Provides communication for up to 9 wired FIO expanders. See FIO expander configurations.
I/O bus edge connector	6-pin connector that provides communication and power to a directly-connected FIO expander (DC only).
Service Port	Ethernet port at 10 or 100 Mbps for setting up the controller and troubleshooting Supports local connection for a laptop running the WebCTRL® application
USB port	USB 2.0 host port for device recovery
Universal inputs	28
	Inputs are configurable in the control program for 0–5 Vdc, 0–10 Vdc, 0–20 mA, RTD, thermistor, dry contact, or pulse counter.
Input resolution	16 bit A/D
Input pulse frequency	60 pulses per second. Minimum pulse width (on or off time) required for each pulse is 8.33 msec.

Universal outputs	16 Outputs can be set as analog or binary outputs. Analog outputs can be used for 0-10 Vdc or 0-20 mA devices. Binary outputs have a built-in relay and can be used to switch external devices or relays up to 1A, 30 Vac/Vdc.
Output resolution	12 bit D/A
Controller microprocessor	32-bit ARM Cortex-A8, 600MHz, processor with multi-level cache memory
Inputs and outputs microprocessor	Two 32-bit microprocessors with 256 kB Flash memory and 64 kB SRAM
Memory	16 GBs eMMC Flash memory and 512 MB DDR3 DRAM (22 MB available to use). User data is archived to non-volatile Flash memory when parameters are changed, every 90 seconds, and when the firmware is deliberately restarted. **NOTE** When you change a parameter, you must wait 30 seconds before turning the power off, in order for the change to be saved.
Real-time clock	Real-time clock keeps track of time in the event of a power failure for up to 3 days
Protection	The OF1628 has two fast acting, 5mm x 20mm glass fuses: • A 2.5A fuse for the OF1628's power • A 4A fuse for the I/O bus edge connector The power and network ports comply with the EMC requirements EN50491-5-2. ⚠ **CAUTION** To protect against large electrical surges on serial EIA-485 networks, place a PROT485 at each place wire enters or exits the building.

LED status indicators	See *LEDs* (page 61) for details.
	• Tricolor **Net** LED to show network status
	• Tricolor **Sys** LED to show system status
	• A **Tx** (Transmit) and **Rx** (Receive) LED for the following ports:
	  ○ Gig-E
	  ○ I/O Bus
	  ○ Port S1
	  ○ Port S2
	  ○ Rnet
	• Output LEDs indicate status of communications.
	• **Prog 1/2** LEDs are customizable. See *To configure custom Prog 1/2 LEDs* (page 64).

Environmental operating range	-40 to 158°F (-40 to 70°C), 10-95% relative humidity, non-condensing **NOTES** • The OF1628 is suitable for installation inside or outside the building envelope. • Install in a UL Listed enclosure only. • Do not change the position of the power or **End of Net** switch at temperatures below -22°F (-30C) to ensure proper operation and electrical connectivity.

Physical	Fire-retardant plastic ABS, UL94-5VA
Terminal blocks and connectors	Screw-type terminal blocks. 0.2 in (5.08 mm) pitch connectors
Mounting	35mm DIN rail mounting or screw mounting
	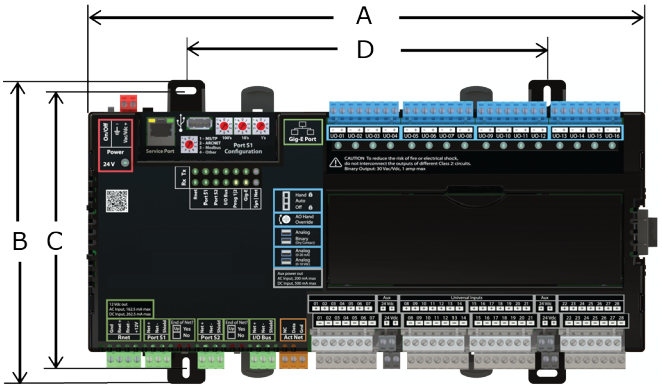
Overall dimensions	A: 12.75 in. (32.38 cm) B: 6.95 in. (17.68 cm) Depth: 2.09 in. (5.31 cm)
Screw mounting dimensions	C: 6.34 in (16.1 cm) D: 8.25 in. (20.95 cm)
Weight	2.7 lb. (1.22 kg)
BACnet support	Conforms to the BACnet Building Controller (B-BC) Standard Device Profile as defined in ANSI/ASHRAE Standard 135-2012 (BACnet) Annex L, Protocol Revision 14
Compliance	United States of America: FCC CFR, Part 15, Class B
	Canada: Industry Canada Compliant, ICES-003, Class A cUL Listed UL 916, PAZX7, Energy Management Equipment
	Europe: CE Mark EN50491-5-2:2009; Part 5-2: EMC requirements for HBES/BACS used in residential, commercial and light industry environment EN50491-3:2009, Part 3: Electrical safety requirements for Home and Building Electronic Systems (HBES) and Building Automation and Control Systems (BACS) Low Voltage Directive: 2014/35/EU RoHS Compliant: 2011/65/EU

Zone sensors

You can wire ZS sensors and/or a Wireless Adapter that communicates with wireless sensors to the OF1628's Rnet port. You can have up to 15 ZS and/or wireless sensors.

NOTES

- A control program can use no more than 5 ZS sensors, so you must use multiple control programs if your Rnet network has more than 5 sensors.
- ZS and wireless sensors can share the Rnet with an Equipment Touch or OptiPoint™ interface.

CAUTION Rnet power
The Rnet port provides 12 Vdc at up to 162.5 mA when the OF1628 is powered from an AC source and up to 262.5 mA when powered by a DC source. When determining which devices to put on the Rnet, verify that the total current draw of the sensors does not exceed the controller's Rnet power. See the sensor's T*echnical Instructions* to determine the power required.

Touchscreen devices

You can wire an Equipment Touch or OptiPoint™ interface to the OF1628's Rnet port to view or change the controller's property values, schedule equipment, view trends and alarms, and more, without having to access the system's server. The Rnet can have one Equipment Touch or OptiPoint™ interface, plus ZS sensors and/or a Wireless Adapter that communicates with wireless sensors.

NOTE These touchscreen devices are not powered by the Rnet.

- The OptiPoint™ interface requires a 24 Vdc external power source.
- The Equipment Touch requires a 24 Vac external power source.

CAUTION A touchscreen device can share a power supply with the Automated Logic® controller as long as:

- The power source shared by the controller and Equipment Touch is AC power.
- The power source shared by the controller and OptiPoint™ interface is DC power.
- You maintain the same polarity.
- You use the power source only for Automated Logic® controllers.

To mount the OF1628

The OF1628 can be mounted on a DIN rail or screwed to a surface.

NOTE We recommend screw mounting when installing in a high temperature and high humidity environment.

DIN rail mount

1 Push down and pull out the DIN rail tabs shown below to clear the DIN rail trough on the back of the controller.

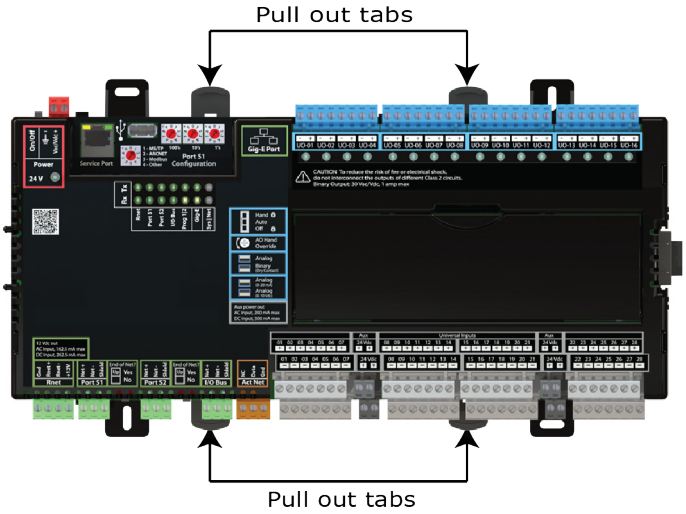

2 Place the controller on the DIN rail so that the rail is in the trough on the back of the controller.

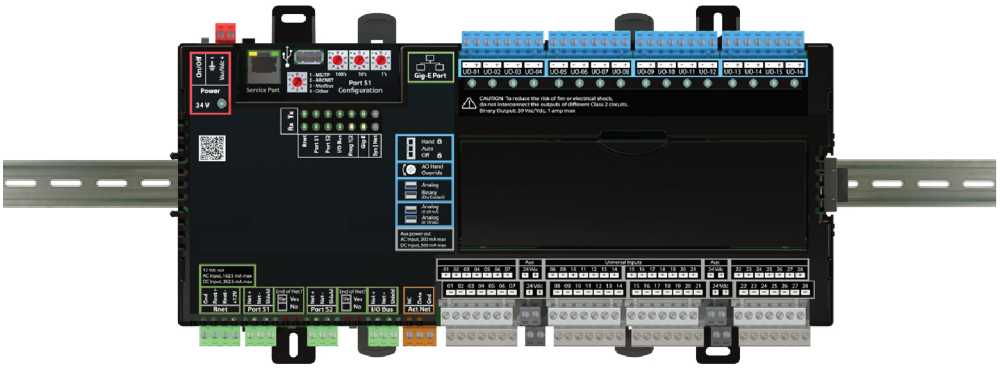

3 Push the DIN rail tabs towards the controller until you hear them click.

4 Pull gently on the controller to verify that it is locked in place.

Screw Mount

Leave about 2 in. (5 cm) on each side of the controller for wiring.

Insert #6 screws through the mounting tabs. Use no more than 12 in lbs. torque to secure plastic tab to mounting surface. Use flat washers to prevent the screw head from deforming the plastic.

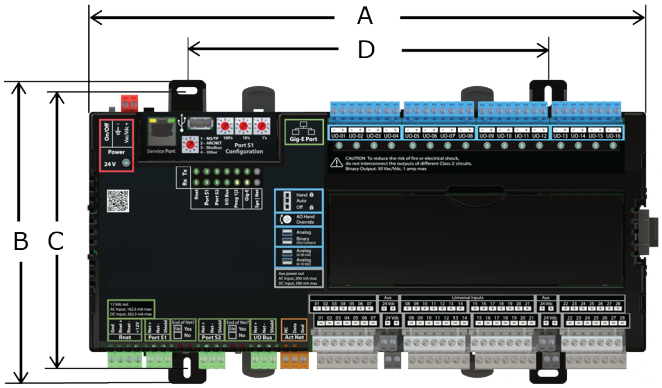

A:	12.75 in. (32.38 cm)
B:	6.96 in. (17.68 cm)
C:	6.34 in. (16.1 cm)
D:	8.25 in. (20.95 cm)
Depth:	2.09 in (5.31 cm)

To attach FIO expanders

Depending on your power supply, FIO expanders can be wired for communication to the OF1628's **I/O Bus** port, with AC or DC power supplied separately, or directly-connected to the OF1628's I/O bus edge connector (DC only). The type of power, AC or DC, requires different device and power arrangements. See *FIO expander configurations* (page 8).

Each expander must have a unique address (1 through 9) set on its rotary switch. See the *FIO Technical Instructions* for more details.

To wire the FIO expander to the I/O Bus port to enable communication (AC or DC)

Use ARC156 wiring (22 AWG, low-capacitance, twisted, stranded, shielded copper wire) to wire the FIO expander to the controller. Do not exceed 1000 feet (305m) total wire length for the I/O bus.

WARNING Do not apply line voltage (mains voltage) to the expander's ports and terminals.

1. Turn off the controller's and expander's power.
2. Wire the expander's **I/O Bus** port to the same port on the controller.

   NOTES

   - To use more than one expander, wire their **I/O Bus** ports together in a daisy-chain configuration. The controller must be the first device on the expander network.
   - Use the same polarity throughout the network segment.
3. On the last expander on the I/O bus, set the I/O Bus **End of Net?** switch to **Yes** to apply network termination and bias.

   NOTES

   - All other **End of Net?** switches on expanders must be set to **No**.
   - The controller has built-in I/O bus network termination and must be the first device on the expander network.

4 Mount the FIO expander to a DIN rail or using screws.

5 Turn on the controller's and expander's power.

To connect the FIO expander to the I/O bus edge connector (DC only)

NOTE

- The following instructions assume that the controller is already mounted either on a DIN rail or using screws.
- You cannot use the I/O bus edge connector on the OF1628 when using an AC power supply.

1 Turn off the OF1628's power.

2 Remove the plastic protective cap from the OF1628's bus edge connector and the expander's edge connector. Squeeze the plastic tabs to pull the cap off.

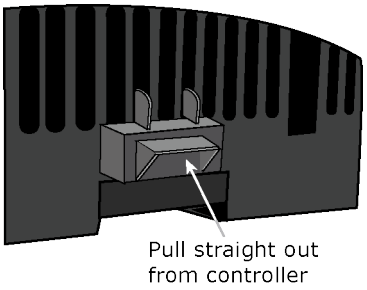

WARNING This connector provides power and communication. To prevent risk of shock, do not touch the bare edge connector if the controller's power is on.

3 DIN rail mounting only—Push down and pull out the expander's DIN rail tabs shown below.

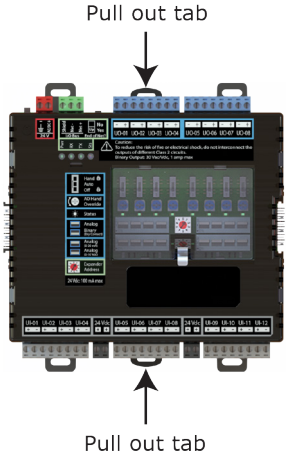

4 Slide the expander's left edge connector down onto the OF1628's edge connector.

5 Do one of the following:

- DIN rail mounting—Push in the expander's center tabs towards the expander until you hear them click. Pull gently on the expander to verify that it is locked to the DIN rail.
- Screw mounting—Insert #6 screws through the expander's mounting holes.

FIO expander configurations using AC power

The FIO expander can be wired to the **I/O Bus** port for communication and also wired to an external transformer for power

The connection/wiring configuration that you use depends on:

- The number of FIO expanders you need (9 maximum)
- The size of the power supply

NOTE The controller has built-in **I/O Bus** network termination and must be the first device on the expander network. Add termination to the last FIO expander on the network by setting I/O Bus **End of Net?** switch to **Yes** (Up).

WARNING Do not apply line voltage (mains voltage) to the controller's ports and terminals.

CAUTIONS

- The OF1628 is powered by a Class 2 power source. Take appropriate isolation measures when mounting it in a control panel where non-Class 2 circuits are present.
- Automated Logic® controllers can share a power supply as long as you:
  - Maintain the same polarity.
  - Use the power supply only for Automated Logic® controllers.

Using AC power

The controller draws 100 VA and each FIO expander draws 50 VA.

You can connect a maximum of nine expanders to the OF1628. The following images are two possible configurations when using AC power. Many more configurations exist, depending on the size of the transformers (50 or 100 VA) and the number of FIO expanders you have.

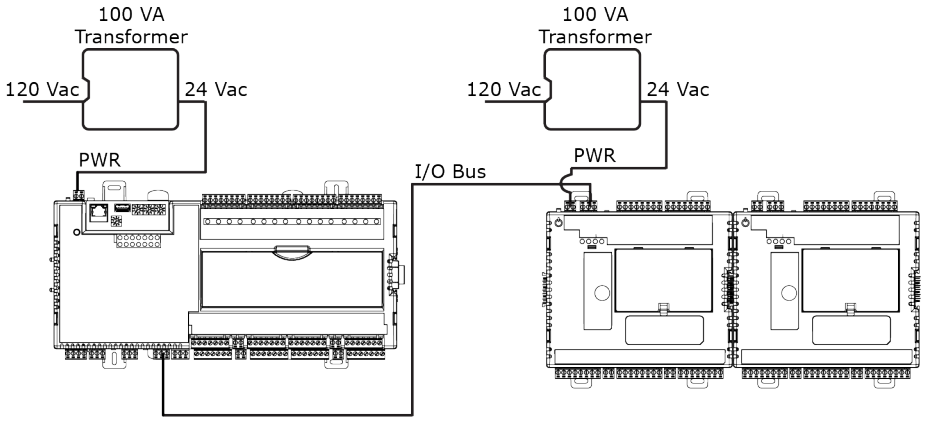

The following configuration shows the maximum combination of connections using the I/O bus edge connector and daisy-chained wiring to the **I/O Bus** port.

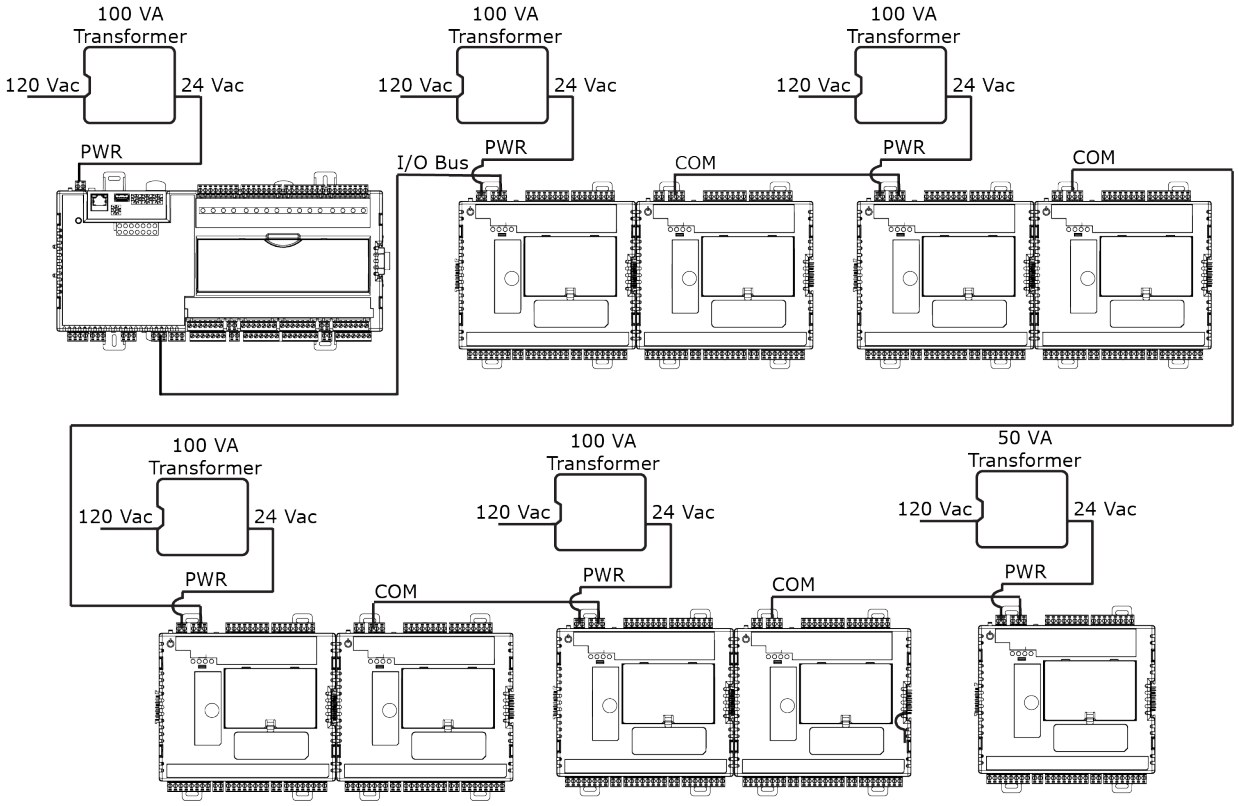

FIO expander configurations using DC power

The connection/wiring configuration that you use depends on:

- The number of FIO expanders you need (9 maximum)
- The size of the power supply

NOTE The controller has built-in **I/O Bus** network termination and must be the first device on the expander network. Add termination to the last FIO expander on the network by setting I/O Bus **End of Net?** switch to **Yes** (Up).

WARNING Do not apply line voltage (mains voltage) to the controller's ports and terminals.

CAUTIONS

- The OF1628 is powered by a Class 2 power source. Take appropriate isolation measures when mounting it in a control panel where non-Class 2 circuits are present.
- Automated Logic® controllers can share a power supply as long as you:
  - Maintain the same polarity.
  - Use the power supply only for Automated Logic® controllers.

Using DC power

The controller draws 48 W and the FIO expander draws 12 W.

In the following image, the 100 W power supply can provide power to one OF1628 and four expanders. The FIO expanders are connected to the controller and to each other using the I/O bus edge connector that provides power and communication. The following configuration shows a combination of connections for the maximum number of expanders, using the edge connector and wiring to the **I/O Bus** port.

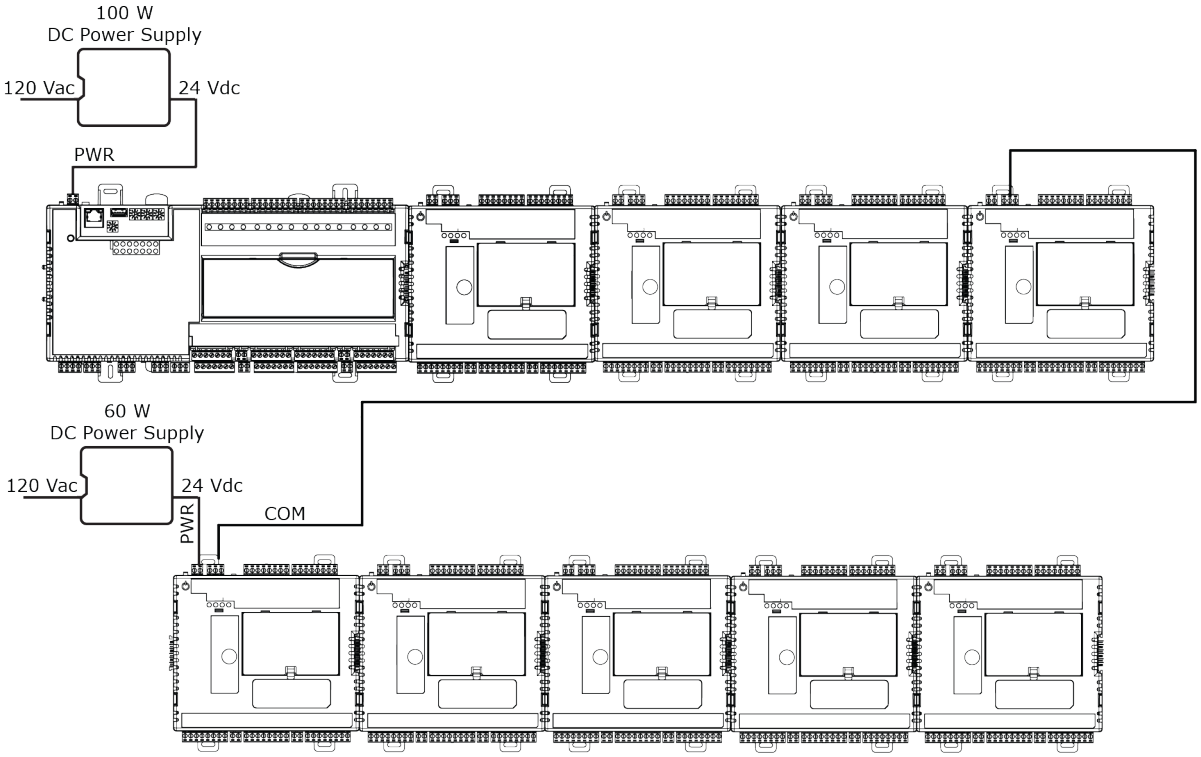

Wiring for power

WARNING Do not apply line voltage (mains voltage) to the controller's ports and terminals.

CAUTIONS

- The OF1628 is powered by a Class 2 power source. Take appropriate isolation measures when mounting it in a control panel where non-Class 2 circuits are present.
- Automated Logic® controllers can share a power supply as long as you:
  - Maintain the same polarity.
  - Use the power supply only for Automated Logic® controllers.

To wire for power

1. Make sure the OF1628's power switch is in the **OFF** position to prevent it from powering up before you can verify the correct voltage.

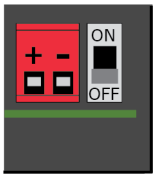

2. Remove power from the power supply.
3. Pull the red screw terminal connector from the controller's power terminals labeled **24 Vac/Vdc** (**+/-**).
4. Connect the power supply's wires to the red screw terminal connector.
5. Connect an 18 AWG or larger wire from the power supply's negative (-) terminal to earth ground. This wire must not exceed 12 in. (30.5 cm).
6. Apply power to the power supply.
7. Measure the voltage at the red screw terminal connector to verify that the voltage is within the operating range of 20 to 30 Vac or 21.4 to 30 Vdc.
8. Insert the red screw terminal connector into the controller's power terminals.
9. To verify the polarity of the wiring, measure the voltage from the negative terminal of the red screw terminal connector to a nearby ground. The reading should be 0V.
10. Turn on the expander's power switch.
11. Verify that the LED on top of the controller is on.
12. Measure the voltage at the red screw terminal connector to verify that the voltage is within the operating range of 20 to 30 Vac or 21.4 to 30 Vdc.

Addressing the OF1628

Set this port's address ...	In this location...	See...
IP	Service Port	*To set the IP address* (page 15)
Port S1	On the controller's rotary switches	*To set the Port S1 address and baud rate* (page 17)
Port S2	Service Port	*To set the Port S2 address and baud rate* (page 18)

To access the controller setup through the **Service Port**:

1 Connect an Ethernet cable from a computer to the controller's Service Port, as shown below.

NOTE Be sure NOT to plug the cable into the Gig-E Port.

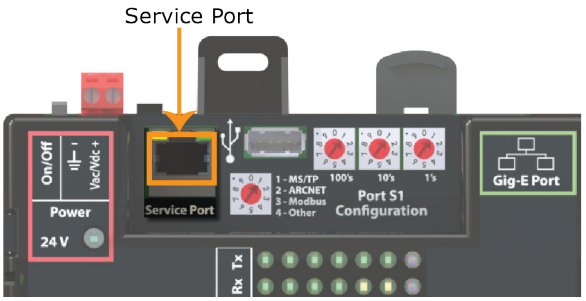

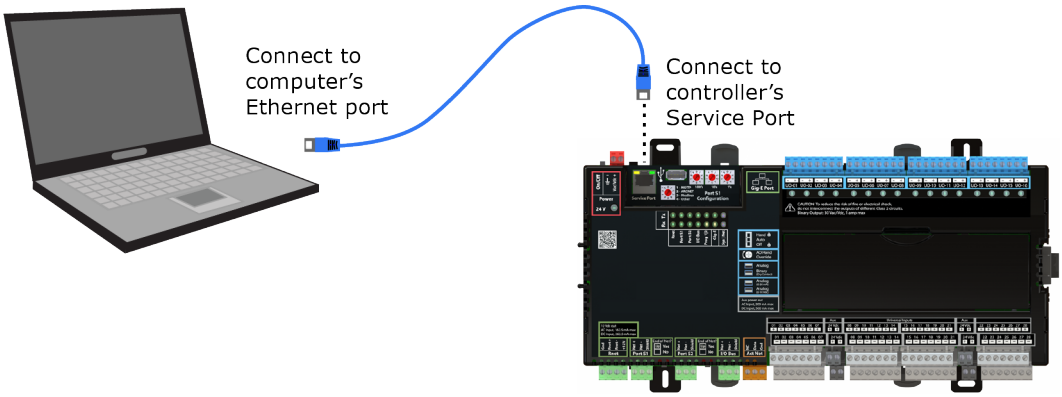

2 Turn off the computer's Wi-Fi if it is on.

3 If your computer uses a static IP address, use the following settings:
   - Address: 169.254.1.x, where x is 2 to 7
   - Subnet Mask: 255.255.255.248
   - Default Gateway: 169.254.1.1

   If it uses a DHCP address, leave the address as it is.

4 Open a web browser on the computer.

5 Navigate to http://local.access or http://169.254.1.1 to see the controller setup pages.

See *To set up the controller through the Service Port* (page 53) for general information on using the controller setup pages.

To set up autobaud

The OF1628 can automatically receive or establish the baud rate on a serial network. When you configure a device on the network for autobaud and then power it up, the device detects the incoming baud rate on the network and sets its baud to match.

Autobaud does not work unless there is a device on the network, whether Automated Logic® or third party, that has the baud rate already set. You can manually set the baud rate on more than one device, as long as the rate is the same for every device.

NOTES

- The received baud rate stays intact during power cycles.
- We recommend you set the baud rate manually on the router for the network.

MS/TP

MSTP Autobaud can be configured in either the:

- **Service Port** controller setup pages > **BACnet** tab > **Port S1** or **Port S2**

  or

- The WebCTRL® interface, on the **Network** tree, select your OF1628 > **Driver** > **BACnet Router Properties** > **MS/TP Configuration** on Port S1 or on Port S2. See *BACnet Router Properties* (page 41).

Modbus

Modbus Serial Autobaud can be configured in either the:

- **Service Port** controller setup pages > **Modbus** tab > **Modbus RS-485** > **Port Configuration**

  or

- The WebCTRL® interface, on the **Network** tree, select your OF1628 and go to **Driver** > **Communication Status** > **Modbus Serial**

NOTE See the *Modbus Integration Guide*.

NOTE If you set **Autobaud** or make other changes in the **Service Port** controller setup pages, you must upload the changes to the system database the first time you access the controller in the WebCTRL® interface. This preserves those settings when you download memory or parameters to the controller.

To set the IP address

You must define the OF1628's IP addressing (IP address, subnet mask, and default gateway) in the Service Port controller setup pages so that the controller can communicate with the WebCTRL Server on the IP network. This IP addressing must match the IP addressing defined in SiteBuilder in the controller's **Properties** dialog box.

Use one of the IP addressing schemes described below with the associated instructions that follow.

Use a...	If...
DHCP IP Address generated by a DHCP server	The IP network uses a DHCP server for IP addressing
Custom Static IP Address from your network administrator	You do not use a DHCP server and the answer to any of the following questions is yes. Will the WebCTRL® system: • Share a facility's existing IP data network? • Have 254 or more devices with static IP addresses? • Be connected to the Internet? • Have at least one device located on the other side of an IP router? • Have any third-party IP devices?
Default IP Address that your system creates	The answer to all of the above questions is no.

NOTE Carefully plan your addressing scheme to avoid duplicating addresses. If third-party devices are integrated into the system, make sure your addresses do not conflict with their addresses.

To set a DHCP IP address

1 On the controller setup **Modstat** tab, find the controller's **Ethernet MAC address** and write it down.

2 On the **Ports** tab under **IP Port**, select **DHCP**.

3 Click **Save**.

4 Write down the **IP Address**.

5 Give the DHCP network administrator the IP address and Ethernet MAC address and ask him to reserve that IP address for the controller so that it always receives the same IP address from the DHCP server.

To set a custom IP address

1 Obtain the IP address, subnet mask, and default gateway address for the controller from the facility network administrator.

2 On the controller setup **Ports** tab under **IP Port**, select **Custom Static**.

3 Enter the **IP Address**, **Subnet Mask**, and **Default Gateway** addresses that the network administrator gave you.

4 Click **Save**.

To set a default IP address

Default IP addressing assigns the following to the controller:

- IP address = 192.168.168.**x**
  where **x** is the setting on the rotary switches in the range from 1 to 253
- Subnet mask = 255.255.255.0
- Default Gateway = 192.168.168.254

1 Set the controller's three rotary switches to a unique address on the network. Set the left rotary switch to the hundreds digit, the middle switch to the tens digit, and the right switch to the ones digit.
EXAMPLE The switches below are set to 125.

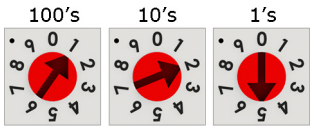

2 On the controller setup **Ports** tab under **IP Port**, select **Default IP Address**.

3 Click **Save**.

CAUTIONS

- If you are using Port S1, the rotary switches also determine that network's address. Although the ARCNET address range is 1 to 255, the Default IP address range is 1 to 253. Setting the rotary switches to 0 will set the Default IP address to 1. Setting the switches to 255 will set the Default IP to 253. Do not set the switches to 254.
- If you set the Default IP address on the controller setup **Ports** tab and then change the rotary switches, you must do one of the following to correct the IP address in the controller:
  - Go to the controller setup **Ports** tab and click the **Update IP Address**.
  - Cycle the controller's power.

  You will then need to correct the IP address in SiteBuilder.

NOTE The default address is an intranet address. Data packets from this address are not routable to the Internet.

To set the Port S1 address and baud rate

The address should be in one of the following ranges based on the port's use.

- For ARCNET, the range is 1 to 255.
- For MS/TP, the range is 0 to 127.
- For Modbus, the range is 1 to 247.

You set this address on the OF1628's three rotary switches. Set the left rotary switch to the hundreds digit, the middle switch to the tens digit, and the right switch to the ones digit.

EXAMPLE The switches below are set to 125.

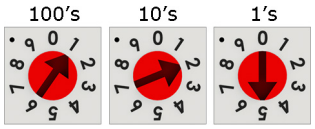

CAUTION If you are using a Default IP address, the rotary switches also determine the IP address.

For MS/TP, set up autobaud or the port's baud rate

1. On the controller setup **BACnet** tab under **Port S1**, select the **MSTP Baud Rate** or select **Yes** for **MSTP Autobaud**. The default is 76,800 bps.

   NOTES

   - See *To set up autobaud* (page 14) for details.
   - If not using autobaud, enter the identical baud rate for all devices on the same MS/TP network segment.
2. Click **Save**.

Modbus

For Modbus, see the *Modbus Integration Guide*.

To set the Port S2 address and baud rate

For MS/TP, set up autobaud or the port's baud rate

1. On the controller setup **BACnet** tab under **Port S2**, type the address in the **MSTP Address** field. The address must be in the range 0 to 127.
2. Select the **MSTP Baud Rate** or select **Yes** for **MSTP Autobaud**. The default is 76,800 bps.

   NOTES

   - See *To set up autobaud* (page 14) for details.
   - If not using autobaud, enter the same baud rate for all devices on the MS/TP network.
3. Click **Save**.

Modbus

For Modbus, see the *Modbus Integration Guide*.

Wiring for communications

The OF1628 communicates on the following ports.

Port	Protocol	Port type(s)	Speed(s)
Gig-E	BACnet/IP BACnet/Ethernet Modbus TCP/IP	Ethernet	10, 100, or 1000 Mbps (1 Gbps)
Port S1 [1]	BACnet/ARCNET	RS485	156 kbps
Port S1 [1] or **Port S2**	BACnet/MSTP Modbus Serial	RS485	9.6 to 115.2 kbps [2] 9.6 to 115.2 kbps [2]
Service Port [3]	HTTP/IP	Ethernet	10 Mbps 100 Mbps
USB Port	USB2.0	USB	
Rnet Port	See *Wiring devices to the OF1628's Rnet port* (page 21).		
I/O Bus Port	See *To attach FIO expanders* (page 8).		
Act Net Port	See *Wiring devices to the OF1628's Act Net port* (page 21)		

[1] Set the **Port S1 Configuration** rotary switch to:
0 if port is not used
1 for MS/TP
2 for ARCNET
3 for Modbus
NOTE 4 is for future use.

[2] Default for MS/TP is 76.8 kbps.
Default for Modbus is 38.4 kbps.

[3] See *To communicate through the BACnet/IP Service Port* (page 58) or *To set up the controller through the Service Port* (page 53).

Wiring specifications

For...	Use...	Maximum Length
Ethernet	CAT5e or higher Ethernet cable	328 feet (100 meters)
ARCNET [1] and MS/TP [2]	22 AWG, low-capacitance, twisted, stranded, shielded copper wire	2000 feet (610 meters)

[1] See the *ARC156 Wiring Technical Instructions*.

[2] See the *MS/TP Networking and Wiring Technical Instructions*.

WARNING Do not apply line voltage (mains voltage) to the controller's ports and terminals.

To connect the OF1628 to the Ethernet

Connect an Ethernet cable to the Gig-E Ethernet port.

NOTE Be careful NOT to plug your cable into the Service Port.

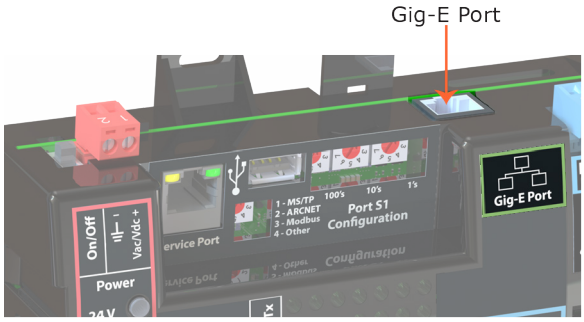

NOTE If your system has controllers on different IP subnets separated by an IP router, you must configure one controller on each subnet as a BACnet Broadcast Management Device (BBMD). Do not configure more than one BBMD per subnet as this may cause circular routes. See "Setting up BACnet Broadcast Management Devices (BBMDs)" in SiteBuilder or WebCTRL® Help.

To wire to a BACnet/ARCNET network

1. Turn **off** the OF1628's power.
2. Check the communications wiring for shorts and grounds.
3. Connect the communications wiring to **Port S1**'s screw terminals labeled **Net +**, **Net -**, and **Shield**.

   NOTE Use the same polarity throughout the network segment.
4. Set the **Port S1 Configuration** rotary switch to 2.
5. If the OF1628 is at either end of a network segment, set the port's **End of Net?** switch to **Yes**.

   NOTE The controller's **End of Net** switch applies network termination and bias. If the controller is at the end of a network segment that includes a DIAG485 that has its **Bias** jumper in the ON position, set the **End of Net?** switch to **No** and connect a 120 ohm termination resistor to the **Net+** and **Net-** terminals. See *DIAG485 Technical Instructions* for more information.

6 Turn on the controller's power.

7 To verify communication with the network, get a Module Status report in the WebCTRL® interface for a controller on the ARCNET network.

NOTE This step requires that you have set up the router in SiteBuilder and downloaded it from the WebCTRL® interface.

To wire to a BACnet MS/TP network

An MS/TP network can be wired to either **Port S1** or **Port S2**.

1 Turn **off** the OF1628's power.

2 Check the communications wiring for shorts and grounds.

3 Connect the communications wiring to the **Port S1** or **Port S2** screw terminals labeled **Net +**, **Net -**, and **Shield**.

NOTE Use the same polarity throughout the network segment.

4 If you are using **Port S1**, set the **Port S1 Configuration** rotary switch to 1.

NOTE If **Port S1** is not being used for any network, set this rotary switch to 0.

5 If the OF1628 is at either end of a network segment, set the port's **End of Net?** switch to **Yes**.

NOTE The controller's **End of Net** switch applies network termination and bias. If the controller is at the end of a network segment that includes a DIAG485 that has its **Bias** jumper in the ON position, set the **End of Net?** switch to **No** and connect a 120 ohm termination resistor to the **Net+** and **Net-** terminals. See *DIAG485 Technical Instructions* for more information.

6 Turn on the controller's power.

7 To verify communication with the network, get a Module Status report in the WebCTRL® interface for a controller on the MS/TP network.

NOTE This step requires that you have set up the router in SiteBuilder and downloaded it from the WebCTRL® interface.

To wire a third-party device

BACnet: You can wire a third-party BACnet device to the OF1628's **Gig-E** port, **Port S1**, or **Port S2**. See the *BACnet Integration Guide* for the OF1628.

Modbus: You can wire a third-party Modbus TCP/IP device (client or server) to the OF1628's **Gig-E** port or a Modbus master or slave device to **Port S1** or **Port S2**. See *Modbus Integration Guide* for the OF1628.

Wiring devices to the OF1628's Rnet port

You can wire the following devices to the OF1628's Rnet port in a daisy-chain configuration:

- ZS sensors
- Wireless Adapter that communicates with wireless sensors
- Equipment Touch
- OptiPoint™ interface

See the device's Technical Instructions for complete wiring instructions.

NOTES

- ZS sensors, a Wireless Adapter, and an Equipment Touch can share the same Rnet.
- The Rnet communicates at a rate of 115 kbps.

Wiring devices to the OF1628's Act Net port

Act Net devices, such as the OptiPoint™ Smart Valves

- Require a class 2 power source (24 Vac +/- 20% or 24 Vdc +/- 10%)
- Cannot be powered by the OF1628's 24 Vac transformer

CAUTIONS

- If the power source for the Act Net devices require a connection to earth ground, you must place it in the same control panel as the OF1628 controller, so that it shares a common earth ground reference, thereby reducing the potential for ground loops.
- A remote Act Net power source, installed near the Act Net devices, should be floating (no local connection to earth ground).

The OF1628 provides an orange, three-pin removable screw terminal connector for the Act Net port.

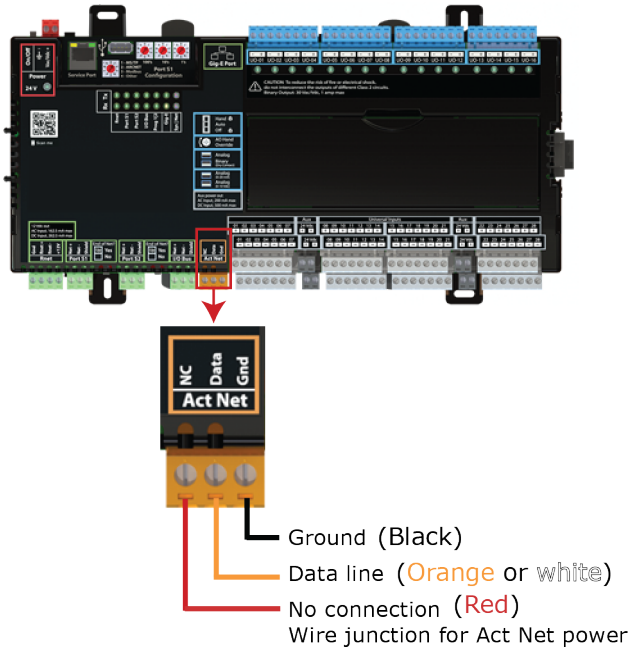

The Act Net port's **NC** (not connected) terminal does not connect to any internal circuitry of the OF1628. It is strictly for terminating wires in a daisy chain bus configuration.

NOTE Make sure you wire the Act Net port terminals on the controller to the matching terminal on the OptiPoint™ Smart Valve. The following illustration is an example of wiring and powering OptiPoint™ Smart Valves and the OF1628's Act Net port.

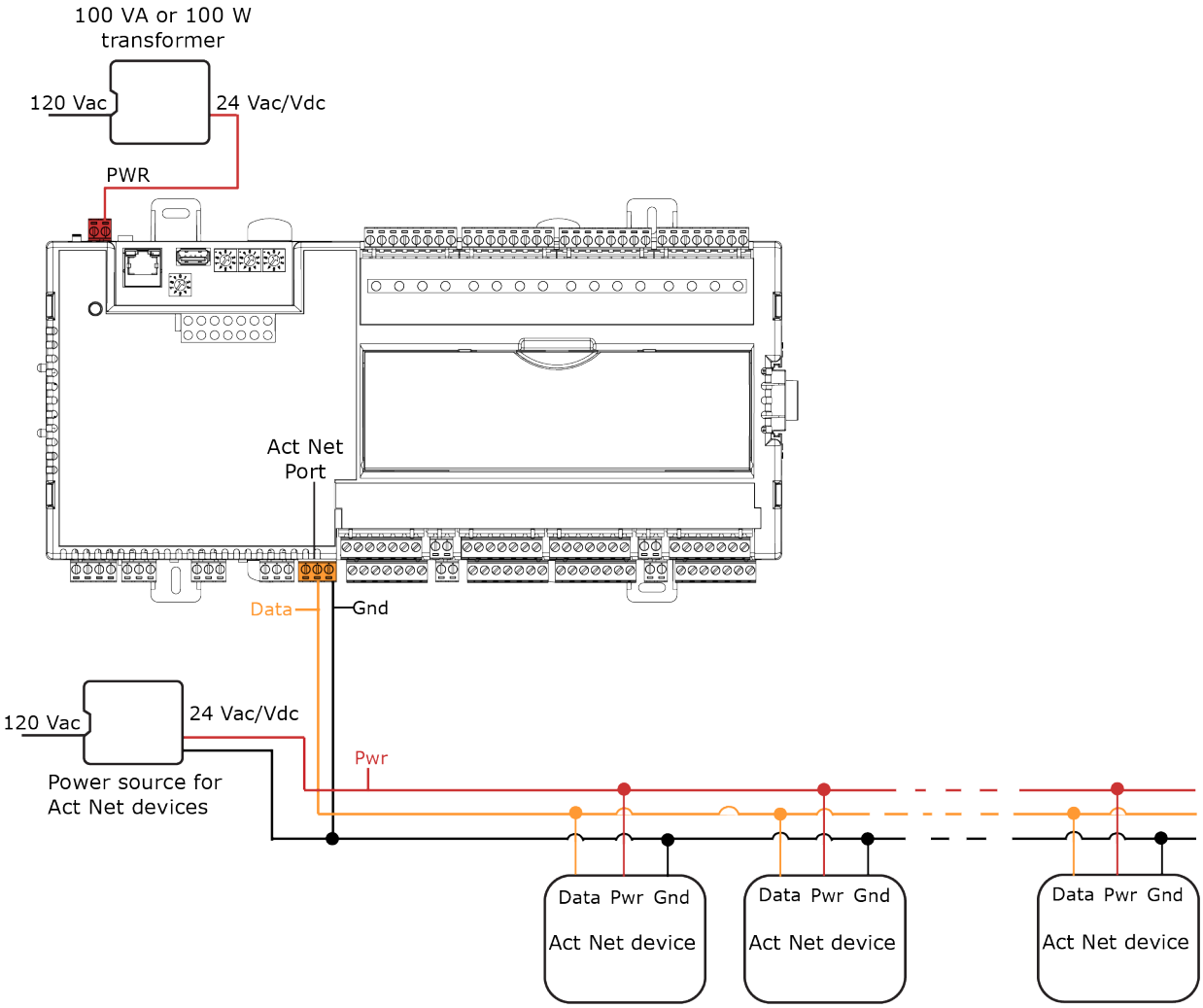

The OF1628 supports Act Net communication to the Act Net devices on a bus with a maximum length of 300 feet (91.44 meters). The bus should be wired with copper conductors of an appropriate size (18 AWG or larger) to compensate for voltage drop and ensure that bus voltage does not drop below 19.2 Vac or 21.6 Vdc..

Wiring inputs and outputs

Inputs

The OF1628 has inputs that accept the following signal types.

Signal Type	Description
Thermistor [1]	• Precon Type 2 (10kOhm at 77 °F) • Precon Type 3 (10kOhm at 77 °F) • Carrier YSI 5kOhm at 77 °F • TS-5700-850 10kOhm w/ 11kOhm shunt (5238 ohm@77°F) Input voltages should be from 0.09 Vdc to 4.36 Vdc for thermistors.
Dry contact	The maximum current when the contact is closed is 0.5 mA. The input voltage should be 4.5V when the contact is open. Maximum closed contact resistance is 1kOhms.
0–5 Vdc 0–10 Vdc	The input impedance of the OF1628 is approximately 221 kOhm when configured as a voltage input.
0–20 mA	The input resistance on the positive (+) terminal is 200 Ohms when configured as a current input. Each **24 Vdc** connector is capable of supplying 24 Vdc to multiple 4–20 mA transducers.
RTD [1]	• Platinum 1kOhm at 32°F (0°C) (0.00375 TCR) • Nickel-iron 1kOhm at 70°F (21°C) • Platinum TS-8000 1kOhm at 32°F (0°C) (0.00385 TCR) • Balco (nickel-iron) TS8000 1kOhm at 70°F (21°C) Input voltages should be from 0.3–0.68V. **NOTE** Automated Logic® recommends use of an external current transducer between an RTD and the OF1628 to improve accuracy and resolution.
Pulse counter [2]	Pulse counting up to 60 pulses per second. Minimum pulse width (on or off time) required for each pulse is 8.33 msec.

[1] To use a thermistor or RTD not listed above, you can set up a custom translation table for your sensor in the controller's driver.

[2] The OF1628 can perform pulse counting for dry contact or voltage inputs if you assign the input to a Pulse to Analog Input microblock. See *To adjust input and output properties* (page 30).

WARNING Do not apply voltage to any input configured for 0-20 mA as this could damage the expander.

Outputs

The OF1628's universal outputs can be set as analog or binary on their two DIP switches.

Analog outputs

Outputs set up as analog can be used for:

- 0-10 Vdc devices
- 0-20 mA devices

WARNING Do not apply voltage to any output whose DIP switch is set to Analog.

If output controls a...	Resistance to ground must be...
0–10 Vdc device	500 Ohms minimum
0–20 mA device	500 Ohms maximum

NOTE The device must share the same ground as the controller.

Binary outputs

The outputs have a built-in relay and provide a dry contact so an external voltage source must be wired to one of the two terminals.

Outputs set up as binary can be used to switch external devices and relays up to 1A, 30 Vac/Vdc.

Wiring specifications

Input wiring

Input	Maximum length	Minimum gauge	Shielding
Thermistor Dry contact	1000 feet (305 meters)	22 AWG	Shielded
0–5 Vdc 0–10 Vdc	1000 feet (305 meters)	26 AWG	Shielded
0–20 mA	3000 feet (914 meters)	26 AWG	Shielded or unshielded
RTD	100 feet (30 meters)	22 AWG	Shielded

NOTES

- Automated Logic® recommends use of an external current transducer between an RTD and the OF1628 to improve accuracy and resolution.
- RTD inputs require either sensor calibration or an estimated offset correction for wiring resistance. See *Offset and Polarity values* (page 33).

Output wiring

To size output wiring, consider the following:

- Total loop distance from the controller to the controlled device

  NOTE Include the total distance of actual wire. For 2-conductor wires, this is twice the cable length.
- Acceptable voltage drop in the wire from the controller to the controlled device
- Resistance (Ohms) of the chosen wire gauge
- Maximum current (Amps) the controlled device requires to operate

To wire inputs and outputs

WARNING Do not apply line voltage (mains voltage) to the controller's ports and terminals.

The input terminals are arranged vertically. The ground (**-**) is below the input terminal (**+**). Allow .75 in. (19 mm) extra wire length for the top (+) screw terminal than for the (-) bottom.

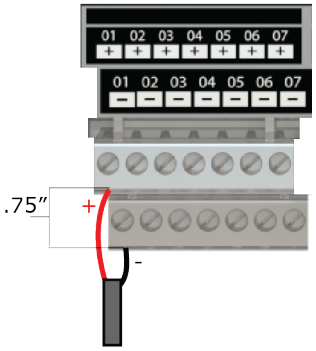

CAUTIONS

- Do not allow more than .125 inch (.3 cm) bare communication wire to protrude.

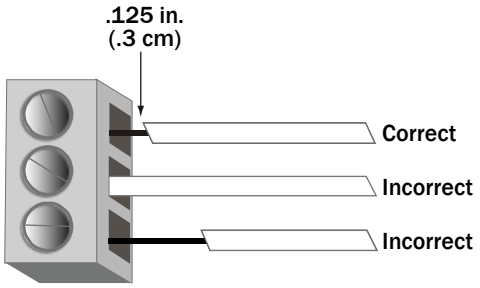

If bare communication wire contacts the cable's foil shield, shield wire, or a metal surface other than the terminal block, communications may fail.

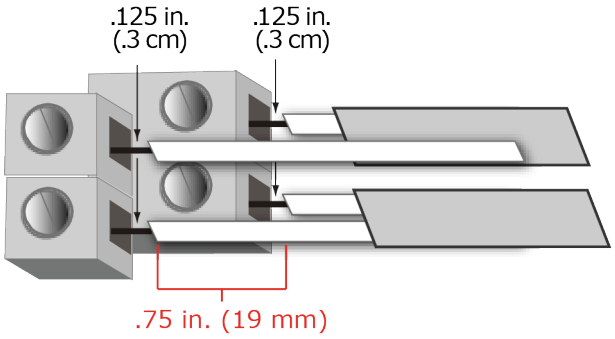

1 Verify that the OF1628's power and communications connections work properly.

2 Turn **off** the OF1628's power.

3 Connect the input wiring to the **UI** screw terminals on the OF1628.

WARNING Do not apply voltage to any input configured for 0-20 mA as this could damage the expander.

NOTE Connect the shield wire to the – terminal with the ground wire. Do not connect the shield wire at the other end of the cable as this will cause a ground loop error.

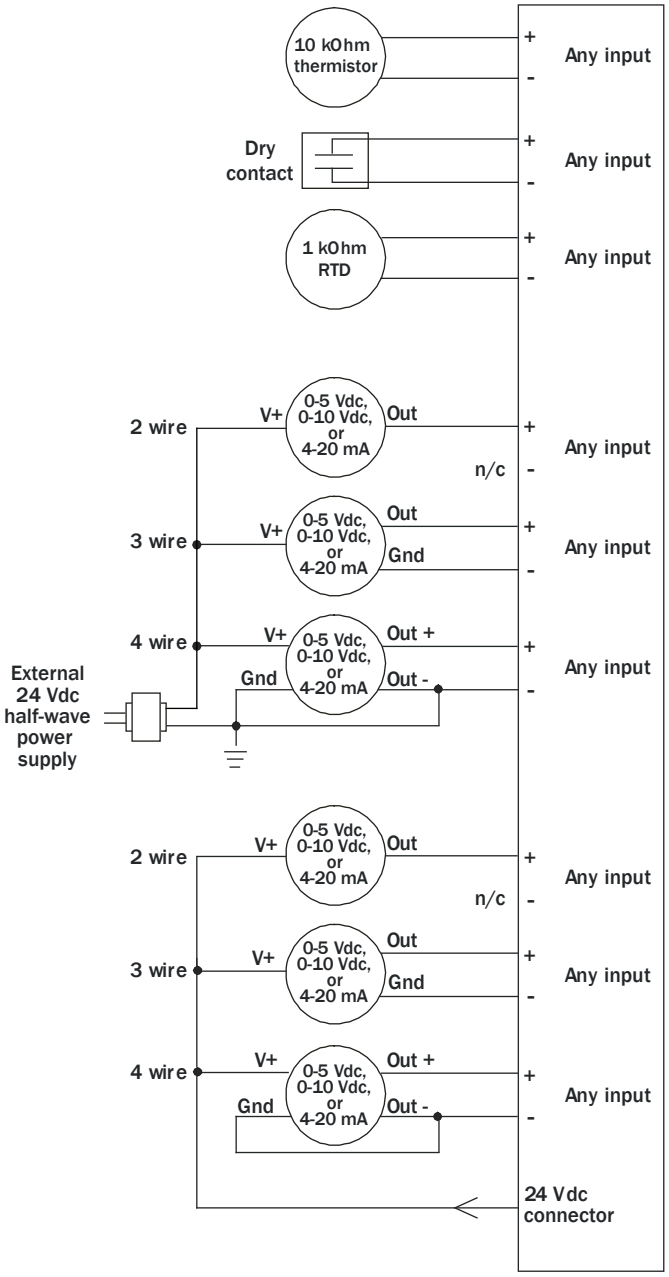

NOTE For a loop-powered 4-20 mA sensor, wire the sensor's positive terminal to the **+** terminal on the OF1628's **24 Vdc** connector. Wire the sensor's negative terminal to an input's **+** terminal.

4 Connect binary and analog output wiring to the **UO** screw terminals on the OF1628 and to the controlled device. Connect the ground wire to the UO's – terminal.

WARNING Do not apply voltage to any output whose DIP switch is set to Analog.

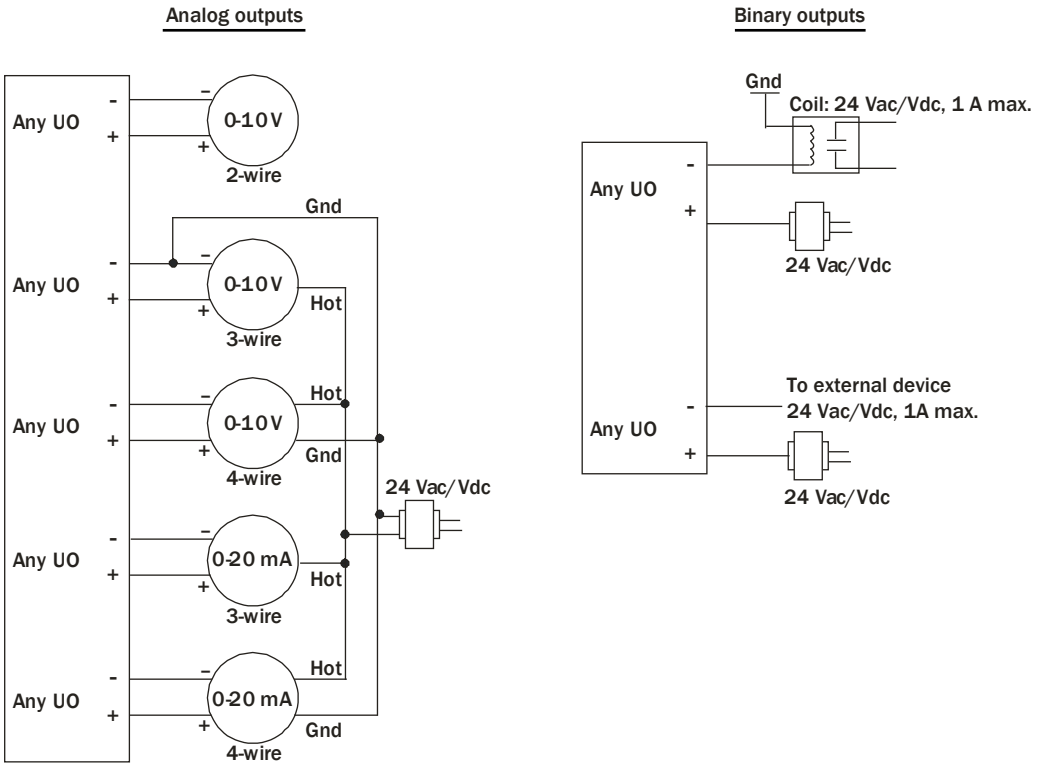

5 Set each output's two DIP switches to the appropriate settings for the type of device wired to the output.

For...	DIP switch on the...	Set to...
Analog 0-20 mA	Top	Up
	Bottom	Up
Analog 0-10 Vdc	Top	Up
	Bottom	Down
Binary	Top	Down
	Bottom	N/A

CAUTION Outputs are set to Binary in the factory. To avoid damage to the controller, use a voltmeter to verify there is no voltage on the + and – terminals before setting the DIP switch to Analog.

6 Turn **on** the OF1628's power.

See *Troubleshooting inputs and outputs* (page 65).

Resolution values

Resolution is not particular to a type of input or output, but the driver handles analog and binary inputs and outputs differently. To set these values appropriately, you should understand how the driver uses them.

Resolution	Notes
Analog Input (BAI)	The driver rounds the microblock's present value according to the resolution. **EXAMPLE** If the calculated present value is 13.789 and you set the **Resolution** to 0.1, the control program uses 13.8 for any calculations downstream from the microblock.
Analog Output (BAO)	The driver rounds the wire input value to the microblock before performing any scaling calculations. **EXAMPLE** If the wire input value is 13.789 and you set the **Resolution** to 0.1, the microblock uses 13.8 for any scaling calculations.
Binary Inputs and Outputs	N/A

To adjust input and output properties

An input or output must be assigned to its corresponding point in the control program. This is typically done when the control program is created, but you can adjust the settings at the time of installation in the WebCTRL® interface.

1. In the WebCTRL® **Geographic** tree, select the equipment controlled by the OF1628.
2. On the **Properties** page, select the **I/O Points** tab.
3. In each point's **Num** field, type the number of the controller's corresponding input or output. For example, if you use UO1 on the OF1628 for the point **Pump S/S**, type `1` in the **Num** field for **Pump S/S**.

   NOTES
   - **Exp** (expander number) is **00** for the OF1628.
   - Do not assign the same output number to more than one point.
4. For expander points, type the point's rotary switch address in the **Exp** field and the number of the expander's corresponding input or output in the **Num** field.

   EXAMPLE If UO-01 on the expander (which has a rotary switch address of 5) is used for the point **Fan S/S**, enter `5:1` in the **Exp:Num** column for **Fan S/S**.

   NOTE Do not assign the same output number to more than one point.
5. Enter the appropriate values for each input and output in the remaining columns. See *Input values*, *Output values*, *Resolution values* and *Offset/Polarity values* below.
6. If you have not performed the initial download to the attached controller, you must download now to verify inputs and outputs.
7. To verify each input's operation, force each sensor to a known value, then compare it to the **Value** shown on the **Properties** page on the **I/O Points** tab.
8. To verify each output's operation, lock each output to a known condition on the **I/O Points** tab, then verify that the equipment operates correctly.

See *Troubleshooting inputs and outputs* (page 65).

Input values

Input	I/O Type	Sensor/Actuator Type	Min/Max
Analog (BAI)			
0-5 Vdc	**0–5 Volt**	**Linear Full Range**	Engineering values associated with 0 Vdc (Min) and 5 Vdc (Max) [1]
		No Translation	N/A. The input microblock's value will be the raw voltage of the input.
0-10 Vdc	**0–10 Volt**	**Linear Full Range**	Engineering values associated with 0 Vdc (Min) and 10 Vdc (Max) [1]
		No Translation	N/A. The input microblock's value will be the raw voltage of the input.
2-10 Vdc	**0–10 Volt**	**Linear w/Offset, 2–10 Volts**	Engineering values associated with 2 Vdc (Min) and 10 Vdc (Max) [1]
0-20 mA	**0–20 mA**	**Linear Full Range**	Engineering values associated with 0 mA (Min) and 20 mA (Max) [1]
		No Translation	N/A. The input microblock's value will be the raw milliamps of the input.
4-20 mA	**0–20 mA**	**Linear w/Offset, 4–20 mA**	Engineering values associated with 4 mA (Min) and 20 mA (Max) [1]
RTD	**RTD Input**	Select your RTD type or set up and select a **Non-Linear, Custom Table** [2, 4]	N/A
Thermistor	**Thermistor**	Select your Thermistor type or set up and select a **Non-Linear, Custom Table** [2]	N/A
Pulse to Analog (BPTA) [3]			
Pulse Counter	**Counter Input**	N/A	N/A
Digital (Binary) (BBI)			
Dry Contact	**Dry Contact**	N/A	N/A

[1] The sensor reads a value and sends a corresponding signal (Volt or mA) to the OF1628's physical input. The Analog Input microblock uses the Min and Max values to linearly translate the signal into the engineering value used in subsequent control logic. For example, set Min to 0 and Max to 10 for a 4–20 mA sensor that measures velocity from 0.0 to 10.0 inches/second so that when the input reads 4 mA, the microblock outputs a value of 0. Similarly, when the input reads 8 mA, the microblock outputs a value of 2.5.

[2] You can set up a custom translation table on the driver's Custom Translation Tables pages in the WebCTRL® interface.

[3] The control program must have one Pulse to Analog Input microblock for each pulse counting input.

[4] To improve the accuracy for RTD sensors used with long cables, see *Offset/Polarity values* (page 33).

Output values

Output	I/O Type	Sensor/Actuator Type	Min/Max
Analog (BAO)			
0-10 Vdc	**Electrical 0–10 Volt**	**Linear Full Range**	Engineering values associated with 0 Vdc (Min) and 10 Vdc (Max) [1]
		No Translation	N/A. The Analog Output microblock will output the same value that comes in to the microblock.
2-10 Vdc	**Electrical 0–10 Volt**	**Linear w/Offset, 2–10 Volts**	Engineering values associated with 2 Vdc (Min) and 10 Vdc (Max) [1]
0-20 mA	**Electrical 0–20 mA**	**Linear Full Range**	Engineering values associated with 0 mA (Min) and 20 mA (Max) [1]
		No Translation	N/A. The Analog Output microblock will output the same value that comes in to the microblock.
4-20 mA	**Electrical 0–20 mA**	**Linear w/Offset, 4–20 mA**	Engineering values associated with 4 mA (Min) and 20 mA (Max) [1]
Digital (Binary) (BBO)			
Relay	**Relay/Triac Output**	N/A	N/A

[1] The Analog Output microblock uses the Min and Max values to linearly translate its incoming value into a physical output signal (Volt or mA) sent from the OF1628 to an actuator. For example, set Min to 0 and Max to 100 for an Analog Output microblock that receives a 0 to 100% open signal from a PID microblock and that controls a 0–10 Vdc actuator so that when the PID signal is 100%, the OF1628 output is 10 Vdc. Similarly, when the PID signal is 50%, the OF1628 output is 5 Vdc.

Offset/Polarity values

Offset/Polarity is not particular to a type of input or output, but the driver handles analog and binary inputs and outputs differently. To set these values appropriately, you should understand how the driver uses them.

Offset/Polarity	Notes
Analog Input (BAI)	**Offset** value (positive or negative) adds a fine adjustment to a sensor reading after all scaling for calibration. **EXAMPLE** If a sensor reads 74.9°F when the actual measured value is 73.6°F, enter an **Offset** of `-1.3` to calibrate the sensor to the measured value. RTD inputs require either sensor calibration or an estimated offset correction for wiring resistance. Cable length and size affects RTD sensor accuracy. Use the following information for a 100 ft. (30.48 m) cable as a guideline for entering an offset. For shorter cable, scale the offset linearly. For example, for a 50 ft. cable, use half the offset shown below.

RTD sensor	Offset for 100 ft. (30.48 m) cable	
	22 AWG	18 AWG
Platinum 1kOhm at 32°F (0°C) (0.00375 TCR)	-1.5	-0.59
Nickel-iron 1kOhm at 70°F (21°C)	-1.1	-0.43
Platinum TS-8000 1kOhm at 32°F (0°C) (0.00385 TCR)	-1.5	-0.59
Balco (nickel-iron) TS8000 1kOhm at 70°F (21°C)	-1.4	-0.56
Cable resistance for signal and ground wires (ohms)	3.1	1.24

Analog Output (BAO)	You can use the **Offset** value (positive or negative) to calibrate an output, but you generally do not need to. If used, the driver adds the offset value to the wire input value before performing any scaling calculations to determine the OF1628's output.
Binary Input (BBI)	**Polarity** determines the microblock's present value when no signal is received from the equipment. When no signal is received from the equipment, if **Polarity** is set to: **normal**—present value is **off** **reversed**—present value is **on**
Binary Output (BBO)	**Polarity** determines the OF1628's output based on the control program's signal to the microblock. When the control program's signal to the microblock is **on**, if **Polarity** is set to: **normal**—output is **on** **reversed**—output is **off** **NOTE** Regardless of **Polarity**, the output will be off if the OF1628 loses power.

To use an output's Hand-Auto-Off switch

You can control an output using the **Hand-Auto-Off** switch.

Set the switch to...	To...
Hand	• Turn on a binary output. • Allow an analog output to be controlled by the **AO Hand Override** potentiometer.
Auto	Let the control program control the output
Off	Turn off the output

The **AO Hand Override**, located below the **Hand-Auto-Off** switch, allows you to manually control the output level of an analog output. Place the **Hand-Auto-Off** switch in the **Hand** position, then turn the potentiometer counterclockwise to reduce the output, or clockwise to increase the output.

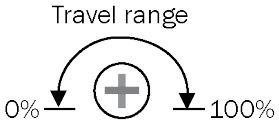

The control program can monitor the status of a **Hand-Auto-Off** switch and display the status on the control program's **Properties** page > **I/O Points** tab in the WebCTRL® interface. The **Value** of the point monitoring the **Hand-Auto-Off** switch shows **Off** if the switch is set to **Auto**, and **On** if the switch is set to **Hand** or **Off**.

To monitor the position of the manual Hand-Auto-Off switch

1. Insert a BACnet Binary Input microblock in the control program.
2. On the microblock's **Properties** page in the WebCTRL® interface, set the **I/O Type** field to **H-A-O Status Feedback**.
3. In the **Input Number** field, type the number of the output you want to monitor.

Downloading the OF1628

Download to send the following items to the OF1628:

Item	Notes
Up to 999 control programs, depending on available memory	Must be in **WebCTRLx.x\webroot**<system_name>**\programs**.
drv_fwex driver	The driver must be in **WebCTRLx.x\webroot**<system_name>**\drivers**. **NOTE** To verify that you have the driver's latest version, go to http://accounts.automatedlogic.com/download, then select **Drivers** > **Controllers**. Compare the latest version to the OF1628's driver in SiteBuilder.
Editable properties	
Schedules	

If you change any of the above items or the OF1628's address after the initial download, you must download again. The first download takes longer than subsequent downloads.

CAUTIONS

- The OF1628 will lose stored data, such as trends, when you download.
- The OF1628 outputs will not maintain their states when you download. This could cause equipment controlled by the OF1628 to shut down and/or restart.

To download from the WebCTRL® interface

1. On the WebCTRL® **Network** tree, select the OF1628.
2. Click **Downloads**.
3. Do one of the following:
   - If the controller is in the Downloads list, go to step 4.
   - If the controller is not in the list:
     a. Click **Add**.
     b. In the pop-up, select the controller.
     c. Select **All Content**.
     d. Click **Add**.
     e. Click **Close**.
4. Select the controller in the Downloads list.
5. Click **Start**.

NOTES

- If the download fails, locate and resolve the problem, then retry the download.
- You can also download from the **Devices** page.

Adjusting the OF1628 driver properties

After you download the driver and control program(s) to the OF1628, you may want to change the driver's properties in the WebCTRL® interface to suit your application.

1 On the WebCTRL® **Network** tree, click ▷ to the left of your OF1628.

2 Click ▷ to the left of **Driver** to see its children.

3 Make changes as needed on the **Properties** page for **Driver** and any of its children.

Driver

The **Driver** page provides the following information plus the items described in the table below:

- The date/time of last parameter change or the last time the database was archived
- If control programs, properties, and schedules were successfully stored in memory
- Undelivered Alarm Status

TouchScreen Control	
TouchScreen Schedule Edit Enable	Check this field to allow a user to edit this controller's schedules from an Equipment Touch or System Touch Schedules screen. **NOTE** Schedules edited on an Equipment Touch or System Touch are not uploaded to the WebCTRL® application. This could result in the controller operating on a schedule that differs from the one you see in the WebCTRL® interface.
Controller Clock	
Clock Fail Date and Time	Date and time the controller uses when its real-time clock is invalid.
Time Synch Sensitivity (seconds)	When the controller receives a time sync request, if the difference between the controller's time and the time sync's time is greater than this field's value, the controller's time is immediately changed. If the difference is less than this field's value, the controller's time is slowly adjusted until the time is correct.
Network Microblocks	
BACnet third party integration points capacity, **integration points requested**, and **integration points active**	Shows how many third-party BACnet points the OF1628 allows (capacity), how many points are in the control program (requested), and how many are currently active (not disabled in WebCTRL®). For example, if the OF1628 allows 1500 points, the control program has 1450 points, and you disabled 30 points in WebCTRL®, you would see: Integration points capacity: 1500 Integration points requested: 1450 Integration points active: 1420
Modbus integration points capacity and **integration points active**	Shows how many Modbus points the OF1628 allows (capacity) and how many are currently active.

Number of poll retries before Network Input Microblocks indicate failure	The maximum number of retries after the initial attempt that a Network microblock will attempt to communicate with its target device. If unsuccessful, the point will transition to an idle state for 30 seconds before attempting to communicate again. Change this field only if directed by Technical Support.
Periodic rebinding interval	If a microblock uses a wildcard in its address, this timer determines how often the microblock will attempt to find the nearest instance of its target. For example, if an outside air temperature address uses a wildcard, a VAV application will look for the outside air temperature on the same network segment or on the nearest device containing that object.
BACnet COV Throttling	
Enable COV Throttling	Under normal circumstances, COV Throttling should be enabled to prevent excessive network traffic if an object's COV Increment is set too low. See EXCEPTION below. When enabled, if an object generates excessive COV broadcasts (5 updates in 3 seconds), the driver automatically throttles the broadcasts to 1 per second. Also, if the object's value updates excessively for 30 seconds, an alarm is sent to the WebCTRL® application listing all objects that are updating excessively. A Return-to-normal alarm is sent only after all objects have stopped updating excessively. EXCEPTION: In rare circumstances, such as process control, a subscribing object may require COV updates more frequently than once per second. For these situations, clear this checkbox, but make sure that your network can support the increased traffic. You will also need to disable the **Excessive COV** alarms under the driver's **Common Alarms**.
Trend Sampling	
Collect a daily midnight sample for all points in this controller that are sampling on COV	For values that change infrequently, select to verify at midnight daily that the point is still able to communicate trend values.
Debug	
Enable Debug Messages	Enable only if directed by Automated Logic® Technical Support.

Device

The **Device** page provides the following information plus the items described in the table below:

- BACnet device object properties for the OF1628
- The character sets supported by this device for BACnet communication

Configuration	
BACnet System Status	The current state of the controller: Operational Download in Progress Download Required Backup in Progress Non-Operational
The following fields refer to all networks over which the OF1628 communicates.	
APDU Timeout	How many milliseconds the device will wait before resending a message if no response is received.
APDU Segment Timeout	How many milliseconds the device will wait before resending a message segment if no response is received.
Number of APDU Retries	The number of times the device will resend a message.

Controller Clock	
Time Broadcaster will synchronize time every ____	If you have third-party BACnet devices on one of the router's networks, you can have the router send a BACnet time sync to those devices at the interval you define in this field.
Time Synchronization Recipients	To define third-party BACnet devices as Time Synchronization Recipients: **1** Click **Add**. **2** Select **Device ID** or **Address** in the **Recipient Type** field. **3** Enter the **Device ID** or **Address** information. **4** Click **Accept**.

Notification Classes

A BACnet alarm's Notification Class defines:

- Alarm priority for Alarm, Fault, and Return to Normal states
- Options for BACnet alarm acknowledgment
- Where alarms should be sent (recipients)

Alarms in the WebCTRL® application use Notification Class #1. The WebCTRL® application is automatically a recipient of these alarms.

Priorities	**NOTE** BACnet defines the following Network message priorities for Alarms and Events.

Priority range	Network message priority
00–63	Life Safety
64–127	Critical Equipment
128–191	Urgent
192–255	Normal

Priority of Off-Normal	BACnet priority for Alarms.
Priority of Fault	BACnet priority for Fault messages.
Priority of Normal	BACnet priority for Return-to-normal messages.
Ack Required for Off-Normal, Fault, and Normal	Specifies whether alarms associated with this Notification Class require a BACnet Acknowledgment for Off-Normal, Fault, or Normal alarms. **TIP** You can require operator acknowledgment for an Alarm or Return-to-normal message (stored in the WebCTRL® database). In the WebCTRL® interface on the **Alarm** > **Enable/Disable** tab, change the acknowledgment settings for an alarm source or an alarm category.
Recipient List	
Recipients	The first row in this list is from the WebCTRL® application. Do not delete this row. Click **Add** if you want other BACnet devices to receive alarms associated with this Notification Class. **NOTE** Additional entries in this table may be lost after a download.
Recipient Description	Name that appears in the **Recipients** table.
Recipient Type	Use **Address** (static binding) for either of the following: • Third-party BACnet device recipients that do not support dynamic binding • When you want alarms to be broadcast (you must uncheck **Issue Confirmed Notifications**). This use is rare.
Days and times	The days and times during which the recipient will receive alarms.
Recipient Device Object Identifier	Type the **Device Instance** from SiteBuilder (or from the network administrator for third-party devices) in the **#** field.
Process Identifier	Change for third-party devices that use a BACnet Process Identifier other than 1. The WebCTRL® application processes alarms for any 32-bit Process Identifier.
Issue Confirmed Notifications	Select to have a device continue sending an alarm message until it receives delivery confirmation from the recipient.
Transitions to Send	Uncheck the types of alarms you do not want the recipient to get.

Calendars

Calendars are provided in the driver for BACnet compatibility only. Instead, use the **Schedules** feature in the WebCTRL® interface.

Common and Specific Alarms

On these pages, you can enable/disable, change BACnet alarm properties, or set delays for the following BACnet alarms:

Common alarms:

- All Programs Stopped
- Excessive COV
- Program Stopped
- Locked I/O
- Controller Halted
- Control Program
- Duplicate Address

Specific alarm:

- Dead Controller Timeout

NOTE To set up alarm actions for controller generated alarms, see *Setting up alarm actions* in the WebCTRL® Help.

Controller Generated Alarm	
Description	Short message shown on the **Alarms** page or in an alarm action when this type of alarm is generated.
Events	
Alarm Category and Alarm Template	See *Customizing alarms* in WebCTRL® Help.
Enable	Clear these checkboxes to disable Alarm or Return to normal messages of this type from the OF1628.
Notification Class	In a typical WebCTRL® system, the Notification Class is 1; however, if needed, you can associate a different notification class with the alarm. See *Notification Classes* (page 38) to set up alarm delivery options for a specific Notification Class.

Custom Translation Tables

Applies to an analog input of an attached expander.

You can set up a translation table that an analog input will use to translate the raw data from a non-linear sensor to the engineering units you want it to provide on the output wire of the Analog Input microblock. In the **Network** tree, select **Custom Translation Table #1**, **#2**, or **#3**. The **Properties** page has instructions. For the input to use the translation table, navigate to the input in the **GEO** tree, select the **Details** tab, then set **Sensor Type (Scaling Method)** to **Non-Linear, Custom Table #__**.

BACnet Router Properties

The **BACnet Router Properties** page provides the following information plus the items described in the table below:

- The OF1628's Ethernet MAC address
- Whether **Port S1** is being used for ARCNET, MS/TP, Modbus, or is disabled
- Whether **Port S2** is being used for MS/TP, Modbus, or is disabled

ARCNET Configuration	
Address	The address that is set on the three rotary switches.
MS/TP Configuration	
Address	For Port S1—The address that is set on the three rotary switches. For Port S2—A unique address on the MS/TP network.
MS/TP Autobaud	To enable autobaud, select **Yes**. This device will receive its baud rate from the master device.
MS/TP Baud Rate	Set this to a baud rate that all other devices on the MS/TP network are set to.
Max Masters	To increase MS/TP performance, enter the highest address used on the MS/TP network for a master controller. This number must be less than or equal to 127.
Max Info Frames	This is the maximum number of information messages a controller may transmit before it must pass the token to the next controller. Valid values are 1 to 255. **TIP** Set **Max Info Frames** to a number in the range 20 to 100 so that the router does not become a bottleneck for traffic being routed from a high speed network to the slower MS/TP network.
End of Network Switch Status	
Switch Status	This displays the state of the **End of Net?** termination switch for the Port S1 and Port S2 networks. End of Network Switch Status Port S1 End of Network: ☐ Port S2 End of Network: ☐
BACnet Network Numbers	
Network numbers	These numbers must match the numbers defined on controller setup **Ports** tab. See *To set up the controller through the Service Port* (page 53). Check **Autogenerated** only if you plan to let the controller autogenerate the network number. **NOTE** When downloaded from the WebCTRL® application, these numbers match those set using SiteBuilder.

IP Configuration	
Allow remote management of IP configuration	When this field is enabled, you can set up IP addressing through an external tool. IP addressing is typically set up through the Service Port.
Enable IP configuration changeover	Only for custom static IP addressing—Select this field to remotely change the router's **IP Address**, **Subnet Mask**, and **Default Gateway Address**. Type the new addresses and the **UDP Port** that your server is using to communicate to all controllers. In the **Changeover timeout** field, enter: • A specific length of time for the controller to attempt to communicate with the **Next Default Gateway Address**. The controller will use the **Next** setting as soon as the controller can communicate with the **Next Default Gateway Address**, or when the timeout occurs, whichever comes first. • **0:00** to have the controller use the **Next** settings as soon as the controller can communicate with the **Next Default Gateway Address**. See "To remotely change a controller's IP address" in WebCTRL® Help for more information on using this feature.
NAT Configuration	
Enable NAT Routing	Reserved for future use.
BACnet Router Options	
Ignore all Reject-Message-to-Network, Reason=1 messages	Clear to delete and rediscover a router if a network's router indicates that the network is no longer present (reason=1). Select to continue routing messages to a network even if its router indicates that the network is no longer present.
Color/Prime Variable Caching	
Peer Caching Enabled	This checkbox will be checked for the router that was defined in SiteBuilder as the peer caching router.
Disable Color Cache	Clear (enable) to improve responsiveness in retrieving colors. Select (disable) to reduce network traffic to third-party (non-color-supporting) devices. **NOTE** Selecting this checkbox also disables dead module alarms.
Dead Controller Timeout	After this period (minutes:seconds) of non-response from an Automated Logic® controller, the router sends an alarm to the server.
Reports colors to	The BACnet Object Identifier of the router that was defined in SiteBuilder as the peer caching router.

BACnet Firewall

If this IP controller is accessible from the Internet, you can increase security by enabling its BACnet firewall. When enabled, this feature prevents the controller from responding to BACnet messages from unidentified sources and allows communication only with IP addresses that you define. These can be all private IP addresses and/or a list of IP addresses. Follow the instructions in the WebCTRL® interface to set up the BACnet firewall.

Network Diagnostics - Statistics

This page shows the network statistics for each of the OF1628's ports that are in use. This same information is provided in a *Module Status report* (page 64).

Click the **Error Rate Trend** or **Packet Rate Trend** link at the bottom of each section to see the statistics displayed as trend graphs. You can also access these trends by clicking on the driver in the network tree, and then selecting **Trends** > **Enabled Points** > and the desired trend graph.

Click a port's **Reset** button to set all of the numbers to zero so the counting can start over.

Router Statistics	
Error Counters	**Dropped Packets**—Data packets that could not be delivered. **Route Not Found**—Packets that could not be delivered because the requested network does not exist. **Route Unreachable**—These are routed packets whose destination network is either busy or offline
Network Activity	Shows the number of incoming and outgoing unicast and broadcast packets for each of the OF1628's networks.
Router Sourced Packets	Shows the number of packets initiated by the OF1628 that are not in response to a request from another device. The numbers in this table will also appear in the appropriate columns in the **Network Activity** tab.
Trends	**Error Rate Trend**—Shows the total number of errors within the trend sampling interval. **Packet Rate Trend**—Shows the total number of packets transmitted and received within the trend sampling interval.
Gig-E Port Statistics	
BACnet/IP Statistics	**BACnet/IP Rx Unicast Packets**—BACnet/IP packets received from a single BACnet device. **BACnet/IP Tx Unicast Packets**—BACnet/IP packets transmitted to a single BACnet device. **BACnet/IP Rx Broadcast Packets**—BACnet/IP broadcast packets received by the OF1628. **BACnet/IP Tx Broadcast Packets**—BACnet/IP broadcast packets transmitted by the OF1628. **Whitelist Rejections** (if *BACnet Firewall* (page 42) is enabled)—Messages blocked by the BACnet Firewall because the IP address that sent the message was not in the whitelist.

Ethernet Statistics	**Ethernet Rx packets**—All packets (including non-BACnet packets such as a ping) received by the OF1628. **Ethernet Tx packets**—All packets (including non-BACnet packets such as a ping) transmitted by the OF1628. **Receive Errors (total)**—All errors related to received packets such as CRC errors, FIFO errors, frame errors, length errors, missed errors, and overrun errors. **Transmit Errors (total)**—All errors related to transmitted packets such as aborted errors, carrier errors, dropped errors, FIFO errors, heartbeat errors, and window errors. **Dropped Packets**—Packets dropped by the OF1628's Ethernet interface.
Trends	**Error Rate Trend**—Shows the total number of errors within the interval time. **Packet Rate Trend**—Shows the total number of packets transmitted and received within the trend sampling interval.
Port S1 Statistics when used for ARCNET	
Error Counters	**Node Reconfiguration**—The ARCNET reconfigurations initiated by the OF1628. **Bus Reconfiguration**—An ARCNET reconfiguration not generated by the OF1628 (such as when a controller connects to the network). **Excessive NACK**—Excessive NACKs received by the OF1628's ARCNET chip. Excessive NACKs are usually the result of a station which is unable to process a steady stream of packets due to buffer overflows or slow responses. **Dropped Packets**—Dropped receive and transmit frames. These may be dropped due to buffer allocation failures, length errors, or NACKed transmit packets.
Activity Counters	**BACnet/ARCNET Rx Packets**—BACnet/ARCNET data packets received by the OF1628. **BACnet/ARCNET Tx Packets**—BACnet/ARCNET data packets transmitted by the OF1628.
Latency	**Average Value (milliseconds)**—The average time from when a packet is queued to be transmitted until it is actually transmitted on the bus. **Maximum Value (milliseconds)**—The maximum time from when a packet is queued to be transmitted until it is actually transmitted on the bus.
Trends	**Error Rate Trend**—Total number of errors within the interval time on this network, including break errors, framing errors, etc.. **Packet Rate Trend**—BACnet/ARCNET data packets transmitted through router, not the total utilization.

Port S1 Statistics when used for MSTP or **Port S2 Statistics**	
Error Counters	**UART Errors**—UART receive and transmit errors such as break errors, framing errors, parity errors, and overrun errors. **Invalid Frames**—Received MS/TP frames that contain an error such as CRC. **Dropped Packets**—Dropped receive and transmit frames. These may be dropped due to buffer allocation failures, length errors, or APDU timeouts (in the case of transmit frames) **Dropped Tokens**—Dropped tokens that have been retransmitted. **No responses—**Messages that did not receive a response from the destination device.
Activity Counters	**BACnet/MSTP Rx Packets**—BACnet/MSTP data packets received by the OF1628. **BACnet/MSTP Tx Packets**—BACnet/MSTP data packets transmitted by the OF1628.
Latency	**Average Value (milliseconds)**—The average time from when a packet is queued to be transmitted until it is actually transmitted on the bus. **Maximum Value (milliseconds)**—The maximum time from when a packet is queued to be transmitted until it is actually transmitted on the bus
Trends	**Error Rate Trend**—Total number of errors within the interval time on this network, including break errors, framing errors, etc. **Packet Rate Trend**—Percentage of total bus bandwidth used to transmit data packets. **NOTE** This is for all bus traffic, not just traffic generated by the OF1628.

Network Diagnostics - Packet Capture

This page allows you to capture network communication on a port and then download the capture file for troubleshooting. Choose one of the following capture options:

- **Start/Stop** - Define the start and stop criteria, and then click **Start** and **Accept** to begin the capture. When the capture stops, the capture file is generated.
  NOTE If a Start/Stop capture is running on any other port, the **Get capture file** button will be disabled until all Start/Stop captures have completed.
  - **Start capture:** - When you check **At (mm/dd/yyyy hh:mm AM/PM)**, enter the time and date, and click **Start**, the packet capture begins at the date and time you specified.

    NOTE The hours field is validated from 0 to 12, and minute field is validated from 0 to 59.
  - **Continuous** - Click **Start** and **Accept** to begin the capture. Click **Save** to momentarily stop the capture and create the capture file. The capture will automatically resume. Click on the **Start/Stop** option to end the **Continuous** capture.
  - If the port is set up for MS/TP, select an option in the **Capture** section.

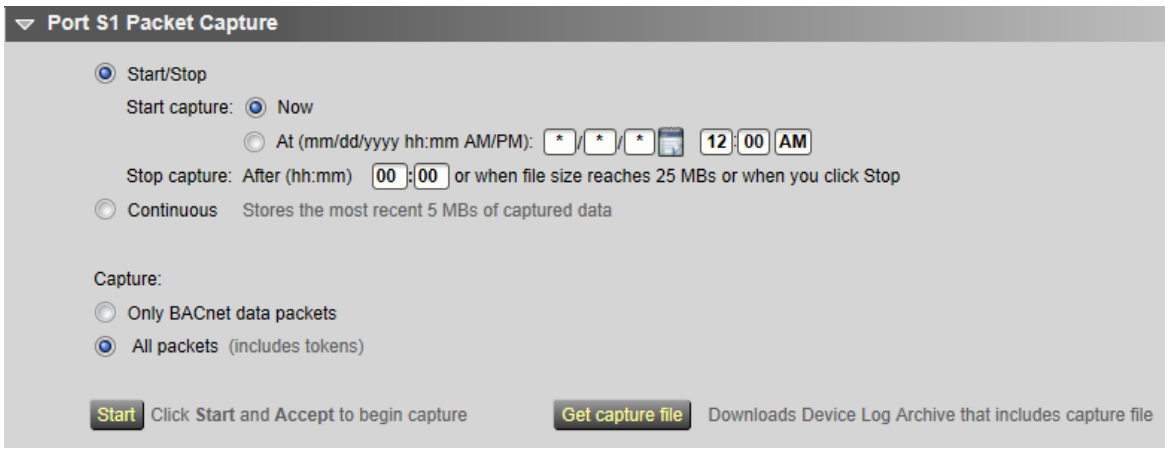

To download the capture file

Capture files are Wireshark files that are added to the Device Log Archive .tgz file. Do the following to view the files.

1. If you do not have Wireshark installed on your computer, download the latest version from the *Wireshark website* (*http://www.wireshark.org*).
2. Run the install program, accepting all defaults. Include WinPcap in the installation.
3. On the WebCTRL® **Packet Capture** page, click **Get capture file** to download the .tgz file. The message appears "Retrieving the file, this may take a little while". Click **OK**.

   NOTE If the size of the .tgz is large, there could be a considerable delay (for example, over 2 minutes) after you click **Get capture file** until your browser begins the download.

4 Open the .tgz file. The files are in the **captures** folder.

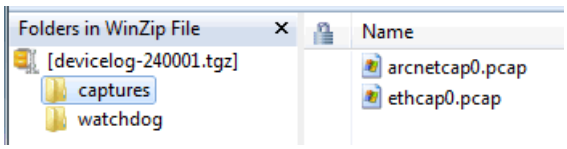

Capture file names are based on the ports.

NOTES

- If you have an MSTP capture file for both Port S1 and Port S2, the file names will be:
  mstpcap0 for Port S1
  mstpcap1 for Port S2
- Clicking **Get capture file** generates the port's .pcap file. If the port has a .pcap file from a previous capture, that file will be overwritten.

5 Extract the .pcap file from the .tgz file.

6 Open the .pcap file in Wireshark.

I/O Expanders

The **I/O Expanders** page provides the configuration and status information described in the table below.

I/O Bus Configuration		
Maximum I/O Bus Expanders	The controller can have no more than 9 FIO expanders.	
Communication Timeout	If the FIO expander does not receive communication from the controller for this amount of time, the expander will reset itself. The range is 15–300 seconds.	
I/O Bus Status	The table shows information for all FIO expanders that are communicating with the OF1628.	
Status	**Possible statuses**	**Description**
	Operational	FIO expander is operating correctly.
	Error: Comm Fail	The controller and FIO expander are not communicating.
	Error: Unsupported Type	The FIO expander type is not compatible with the controller firmware version.
	Disabled	Status briefly shown before **Error: Comm Fail** appears.
	Download Required	The version of firmware in the FIO expander is different than expander firmware in the OF1628.

	Downloading	The FIO expander's firmware is being upgraded.
	Boot Running	Status briefly shown before **Download Required** appears.
	Error: Calibration	FIO expander was not calibrated in the factory. Please return.
	Error: 15V Power Supply	FIO expander has detected an issue with its 15V power supply.
	Error: 5V Power Supply	FIO expander has detected an issue with its 5V power supply.
Input and **Output Numbers**	The number of inputs, HAOs, and outputs on the expander.	
FW Version	The version of firmware that is in the expander.	
Hardware Type	The number in this column should appear in the list of **Expander Types Supported** in the **I/O Bus Firmware Inventory** section.	
Network Termination	Shows if the expander's I/O Bus **End of Net?** switch is set to **Yes** (On) or **No** (Off).	
Model Type	The expander model.	
I/O Bus Firmware Inventory		
Version	The version of FIO expander firmware that is in the OF1628.	
Expander Types Supported	The FIO expander types supported by the OF1628.	

Act Net Bus

Act Net Bus Status

An Act Net device that is physically connected to the OF1628 is automatically identified and the serial number and current status are displayed on the **Act Net Bus** page.

NOTE You can edit the address and description on this page. Applying changes can take up to 20 seconds to complete.

Act Net Bus Status	This table shows devices connected to the Act Net port. All fields are read-only.	
Device Address	Act Net device address (1 to 16). The same address is used as exp# in the microblock configuration with the input/output number for all Act Net devices set to 1.	
Device Description	This text is editable in the **Act Net Bus Configuration** table directly below.	
Serial Number	The serial number of the Act Net device. This number is printed on a label on the device.	
Device Status	Displays the current status of the device	
	Possible statuses	**Description**
	Normal Operation	Successful communication
	No Communication with the device	OF1628 has lost communication with the Act Net device
	Duplicate Address on the network	More than one device has the same Device Address.
	Unsupported Device Type	Device is not recognized
	Act Net Wiring Error	Loopback error on Act Net bus, possibly caused by wiring problem or hardware failure.
Act Net Bus Configuration	This table shows devices connected to the Act Net port. Most fields are editable.	
Current Address	Bus address of the Act Net device	
Device Description	Edit the name if needed.	
Serial Number	Serial Number of the device corresponds to Current Address in the same row. This field is read-only if the corresponding device is in communication, otherwise becomes editable so that user can enter the serial number manually (can be found as a label on the actuator).	
New Device Address	Select a new bus address from the drop-down list.	
Configuration Status	Once all changes are accepted, after applying changes this fields shows success/fail statuses.	
	Possible statuses	**Description**

	Success	Address selection successful. It may take a few seconds to updates in the status table. Please refresh the page to see the updated status table
	In Progress	This string appears after accepting the changes and before success/fail messages are appeared. This message may not appear all the time due to data refresh rate.
	Invalid serial number format	A serial number that was entered manually has an invalid format. Correct format example: 01647-20212-250-160
	Device not found	Serial number format is valid, but the device with the number cannot be located
	Select unused address	If the **New Device Address** is a duplicate, select an unused address from the drop-down list. To update the table, click **Accept** after every change.
	Unknown Error	Firmware or bus error.
	Auto addressed device	When a device that does not have an address is found on the bus, an unused address in automatically assigned. You can select a different address in the **New Device Address** field, if needed.

To resolve duplicate addresses on Act Net bus

When devices display the error **Duplicate Address on the network**, you can use either of the following methods to resolve the problem.

- Method 1: Using the **Act Net Bus Configuration** table
  1. For each duplicate device, enter the **Serial Number**, which you can find on a sticker on the device.
  2. Select a **New Device Address** from the drop-down list.
  3. Click **Accept**.
  4. Verify that there are no longer any **Duplicate Address on the network** errors.

- Method 2: Reinstalling the devices
  1. Remove all duplicate devices from the bus.
  2. Connect one of the removed devices and wait for the **Act Net Bus Status** table to update.
  3. Chose a unique address for the new device and click **Accept**. Wait until the operation is successful.
  4. Repeat the steps 2 and 3 for the remainder of the removed devices.
  5. Verify that there are no longer **Duplicate Address on the network** errors.

Communication Status

The **Communication Status** page shows the status of the protocols currently running on the OF1628's ports.

Standalone Controller Detection

You can use the fields on this page with a binary input in your control program to detect when an expander goes offline. If the controller has not received a write request from the selected network within the specified amount of time, the input switches ON. The input remains OFF as long as write requests are received. The binary input must have the Expander number and Input number set to **99** and the I/O Type set to **Special**.

Modbus Serial, Modbus TCP/IP, and Modbus Error Definitions pages

If the controller will be used with Modbus devices, see the *Modbus Integration Guide* for information on using these pages.

To set up Network Statistic trends

To view the *Network Statistics* (page 43) as trend graphs, go to one of the following on the WebCTRL® **Network** tree:

- Under **Driver**, on the **Network Diagnostics** > **Statistics** page, click a Trend link at the bottom of each section.
- On the **Driver** page, click the **Trends** drop-down button, select **Enabled Points** and then the graph you want.

You can define:

- How the graph looks on the trend's **Configure** tab.
- How you want trend samples to be collected on the **Enable/Disable** tab. See table below.

Field	Notes
Sample every _:_:_ (hh:mm:ss)	(Recommended method) To record the value at a regular time interval, enter hh:mm:ss in this field.
Sample on COV (change of value)	To record the value only when the value changes by at least the amount of the **COV Increment**, set the **Sample every** field to 0:00:00 and enter a value in the **COV Increment** field.
Max samples	Network Statistic trends have a non-configurable maximum trend log buffer size of 1440. **NOTE** Trending consumes memory in the controller. Click **Reset** to delete all samples currently stored in the controller.
Stop When Full	Check this field to stop trend sampling when the maximum number of samples is reached.
Enable trend log at specific times only	Collects trend data for the specific period of time you define in the time and date fields.

Field	Notes
Enable Trend Historian	Archives trend data to the system database.
Store Trends Now	Writes all trend data in the controller to the system database without having to enable trend historian.
Write to historian every __ trend samples	Writes all trend data in the controller to the system database each time the controller collects the number of samples that you enter in this field. This number must be greater than zero and less than the number entered in the Max samples field. The number of trends specified must be accumulated at least once before the historical trends can be viewed. **NOTE** Any trends not stored in the historian will be lost if the controller loses power.
Trend samples accumulated since last notification	Shows the number of samples stored in the controller since data was last written to the database.
Last Record Written to Historian	Shows the number of trend samples that were last written to the database.
Keep historical trends for __ days	This is based on the date that the sample was read. Select the first option to use the system default that is defined on the **System Settings** > **General** tab. Select the second option to set a value for this trend only.

To set up the controller through the Service Port

Using a computer and an Ethernet cable, you can communicate with the OF1628 through a web browser to:

- View the controller's Module Status report
- View/change controller and network settings. Changes take effect immediately.
- Troubleshoot
- Use BACnet/IP Service Port to access the WebCTRL® application or a touchscreen device. See *To communicate through the BACnet/IP Service Port network* (page 58).

1 Connect an Ethernet cable from a computer to the controller's Service Port, as shown below.

NOTE Be sure NOT to plug the cable into the Gig-E Port.

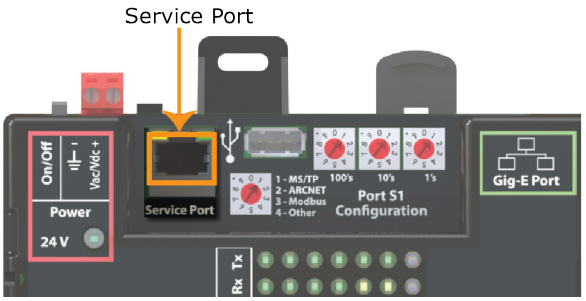

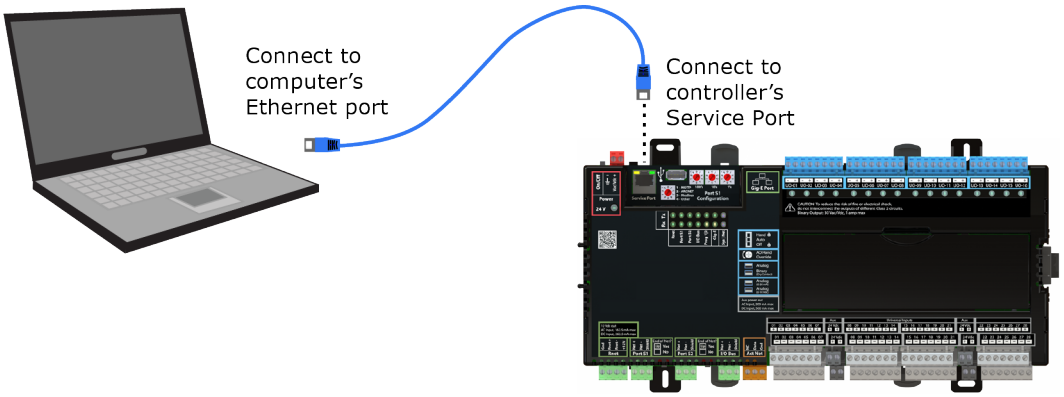

2 Turn off the computer's Wi-Fi if it is on.

3 If your computer uses a static IP address, use the following settings:
   - Address: 169.254.1.x, where x is 2 to 7
   - Subnet Mask: 255.255.255.248
   - Default Gateway: 169.254.1.1

   If it uses a DHCP address, leave the address as it is.

4 Open a web browser on the computer.

5 Navigate to http://local.access or http://169.254.1.1 to see the Service Port controller setup pages.

NOTE The first time you access the controller in the WebCTRL® interface after you have changed settings through the Service Port, be sure to upload the changes to the system database. This will preserve those settings when you download memory or parameters to the controller.

ModStat tab

This tab provides the controller's Module Status report that gives information about the controller and network communication status. See *Appendix - Module Status field descriptions* (page 71).

Device tab

The information on the **Devices** tab is typically defined in the WebCTRL® interface and then downloaded to the controller. However, you would set the information on the controller setup **Device** tab if the controller is stand-alone without a WebCTRL® system.

BACnet Object	
Device Instance	**Autogenerated**—The Device ID is automatically set to a number equal to the (IP network number) x 100 + rotary switch address. **Assigned**—Lets you enter a specific number that is unique on the BACnet network.
Device Name	**Autogenerated**—The Device Name is automatically set as the word device + the Device Instance. For example, device2423911. **Assigned**—Lets you enter a specific name that is unique on the BACnet network.
Device Location	You can enter an intuitive location for the device in the WebCTRL® interface.
Device Description	You can enter an intuitive description for the device in the WebCTRL® interface.
Configuration	
APDU Timeout	How many milliseconds the device will wait before resending a message if no response is received.
APDU Segment Timeout	How many milliseconds the device will wait before resending a message segment if no response is received.
APDU Retries	The number of times the device will resend a message.
Controller Information	
Clear Counts/Logs	Clears Reset counters and the three message history fields from the Module Status.
Data Backup and Restore	
Backup	Displays time of the last backup. Click button to backup the controller's control programs, properties, and schedules.
Restore	Displays time of the last restore. Click button to restore the most recent backup of the controller's control programs, properties, and schedules.

Ports tab

IP Port	
IP Addressing	Select the type of addressing the controller is to use. See *Addressing the OF1628* (page 13).
Port S1	
End of Network	Indicates status of the controller's **End of Net?** switch.
Active Protocol	Indicates status of the controller's **Port S1 Configuration** rotary switch. 0=Disabled 1=MS/TP 2=ARCNET 3=Modbus
Address	The address that is set on the three rotary switches. See *To set the Port S1 address and baud rate* (page 17).
Port S2	
End of Network	Indicates status of the controller's **End of Net?** switch.
Active Protocol	The protocol that has been enabled for Port S2 on the BACnet or Modbus tab.

BACnet tab

The information on the **BACnet** tab is typically defined in SiteBuilder or the WebCTRL® interface and then downloaded to the controller. However, you would set the information on the controller setup **BACnet** tab if the router is stand-alone without a WebCTRL® system.

IP Port	
BACnet Network Number	**Disable Routing**—Select if the IP port is not used. **Autogenerated**—The BACnet/IP network number is automatically set to 2400. **Assigned**—Lets you enter a specific number.
BACnet UDP Port	The port that the WebCTRL® application will use for BACnet communication.
Enable NAT Routing	**For future use.** Check if the OF1628 is behind a NAT router (firewall).
Global NAT IP Address	**For future use.** Public IP address of the NAT router.
Global NAT BACnet UDP Port	**For future use.** Port number assigned to the NAT router's public interface.

BACnet Secondary IP Net Number	If the OF1628 has two BACnet/IP networks communicating on the Gig-E port, enter the second IP network number in this field. If the OF1628 is behind a NAT router and there is a second network with BACnet/IP devices behind the NAT router, enter the second network number in this field to logically connect the OF1628 to the devices on the second network. 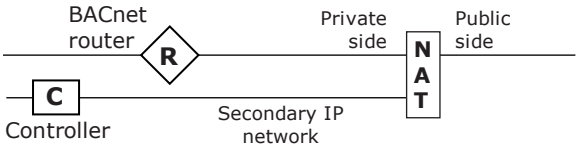
BACnet Secondary UDP Port	If the OF1628 has two BACnet/IP networks communicating on the Gig-E port, enter the port number that the WebCTRL® application will use for BACnet communication. This port must be different than the **BACnet UDP Port**.
Ethernet Port	
Address	A factory assigned Ethernet MAC Address for the **Gig-E** port.
BACnet Network Number	Specify a number for the BACnet/Ethernet network or set to 0 if the port is not used.
Port S1	
End of Network	Indicates status of the controller's **End of Net?** switch.
Active Protocol	Indicates status of the controller's Port S1 rotary switch. 0=Disabled 1=MS/TP 2=ARCNET 3=Modbus
Address	The address that is set on the three rotary switches. See *To set the Port S1 address and baud rate* (page 17).
MSTP Autobaud	Select **Yes** to enable this slave device to automatically receive its baud rate from a master on the network that has the fixed baud rate.
MSTP Baud Rate	Set this to a baud rate that all other devices on the MS/TP network are set to.
MSTP Max Master	To increase MS/TP performance, enter the highest address used on the MS/TP network for a master controller. This number must be less than or equal to 127.
MSTP Max Info Frames	This is the maximum number of information messages a controller may transmit before it must pass the token to the next controller. Valid values are 1 to 255. **TIP** Set **Max Info Frames** to a number in the range 20 to 100 so that the router does not become a bottleneck for traffic being routed from a high speed network to the slower MS/TP network.

BACnet Network Number	Select: **Disable Routing** if Port S1 is not used. **Autogenerated** to have the network number for Port S1 automatically set to a number equal to ((IP network number + rotary switch address) x 10). **Assigned** to enter a specific number.
Port S2	
End of Network	Indicates status of the controller's **End of Net?** switch.
Active Protocol	Shows one of the following: • **Modbus** if enabled on the **Modbus** tab • **BACnet/MSTP** if you enter a **BACnet Network Number** below for an MS/TP network • **Disabled** if neither of the above have been done
Address	The controller's unique address on the MS/TP network.
MSTP Autobaud	Select **Yes** to enable this slave device to automatically receive its baud rate from a master on the network that has the fixed baud rate.
MSTP Baud Rate	Set this to a baud rate that all other devices on the MS/TP network are set to.
MSTP Max Master	To increase MS/TP performance, enter the highest address used on the MS/TP network for a master controller. This number must be less than or equal to 127.
MSTP Max Info Frames	This is the maximum number of information messages a controller may transmit before it must pass the token to the next controller. Valid values are 1 to 255. **TIP** Set **Max Info Frames** to a number in the range 20 to 100 so that the router does not become a bottleneck for traffic being routed from a high speed network to the slower MS/TP network.
BACnet Network Number	Select: **Disable Routing** if Port S2 is not used. **Autogenerated** to have the network number for Port S2 automatically set to a number equal to ((IP network number + rotary switch address) x 10) + 3. **Assigned** to enter a specific number.
Home Network	This is typically the network that is communicating with the building automation system's application. This sets the BACnet Address of the Device object.

Modbus tab

If the controller will be used with Modbus devices, see the *Modbus Integration Guide* for information on using this tab.

Security tab

BACnet Firewall	If your BACnet Firewall configuration in the WebCTRL® interface did not include the WebCTRL® server IP address, thus blocking communication with the WebCTRL® server, you can disable the controller's BACnet Firewall on the controller setup **Security** tab. **NOTE** You can enable the BACnet Firewall only in the WebCTRL® interface.

To communicate through the BACnet/IP Service Port network

You can connect to the Service Port to access your network through the:

- WebCTRL® application
- Automated Logic® touchscreen device

1 Connect an Ethernet cable from a computer to the controller's Service Port, as shown below.

NOTE Be sure NOT to plug the cable into the Gig-E Port.

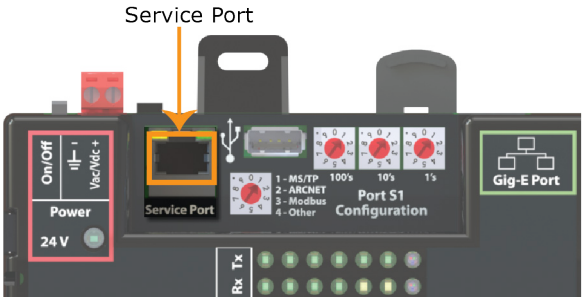

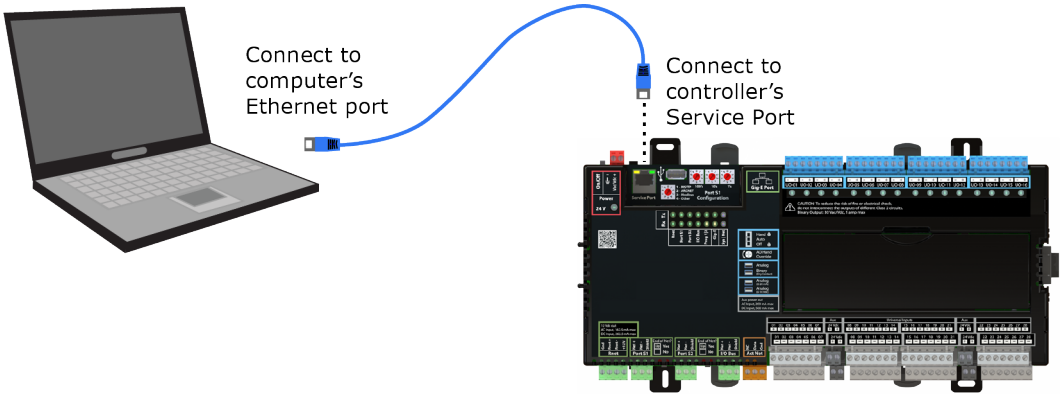

2 Turn off the computer's Wi-Fi if it is on.

3 If your computer uses a static IP address, use the following settings:
   - Address: 169.254.1.x, where x is 2 to 7
   - Subnet Mask: 255.255.255.248
   - Default Gateway: 169.254.1.1

   If it uses a DHCP address, leave the address as it is.
4 Open a web browser on the computer and open your WebCTRL® application.
5 On the **System Configuration** tree, select **Connections** > **Properties** > **Configure** tab.
6 Select **BACnet/IP Service Port Connection** from the drop-down list and click **Add**.
7 If needed, enter the **Service Port Network Number** as follows:
   - **0** - the computer or the OptiPoint™ interface communicates only with the OF1628 and not the network
   - **1** to **65534** - the OF1628's network number for network communication
   - **65535** - searches for an available network number from 65531 to 65534. If any of these numbers are not available, you will have to assign a network number and enter it.
8 Click **Accept**.
9 On the **View** tab, select **BACnet/IP Service Port Connection** from the drop-down list.
10 Click **Accept**.
11 On the **Configure** tab, select the **BACnet/IP Service Port Connection** and click **Start**. The status changes to **Connected**.

To communicate locally through the Rnet port

You can connect a computer running WebCTRL® to the OF1628's **Rnet** port to download or troubleshoot.

PREREQUISITES

- A computer with a USB port
- A USB Link Kit. See the *USB Link Kit Technical Instructions*.
  NOTES
  - The USB Link Kit driver is installed with a WebCTRL® v6.5 or later system. But if needed, you can get the latest driver from *http://www.silabs.com/products/mcu/Pages/USBtoUARTBridgeVCPDrivers.aspx*. Install the driver before you connect the USB Link Kit to your computer.
  - You will use only the portion of the USB Link Kit that has the USB connector.

  CAUTION If multiple controllers share power but polarity was not maintained when they were wired, the difference between the controller's ground and the computer's AC power ground could damage the USB Link Kit and the controller. If you are not sure of the wiring polarity, use a USB isolator between the computer and the USB Link Kit. Purchase a USB isolator online from a third-party manufacturer.
- A 3-pin screw terminal connector and 3-wire cable

1 Connect one end of a piece of 3-wire cable to the 3-pin connector.

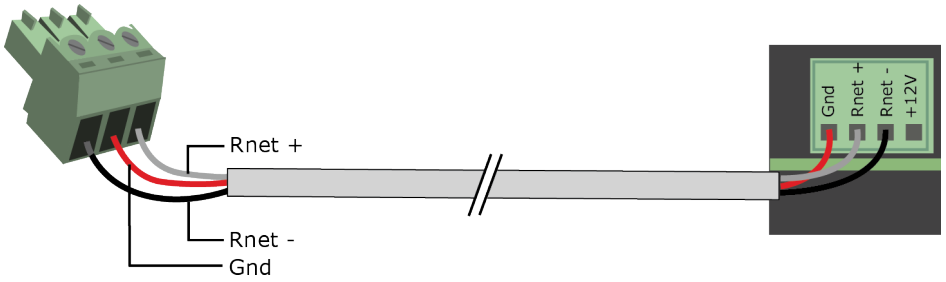

2 Connect the other end of the 3-wire cable to the OF1628's **Rnet** port as shown in the drawing above in step 1.

3 Connect the 3-pin connector to the portion of the USB link kit shown in the drawing below, then connect the USB connector to the computer.

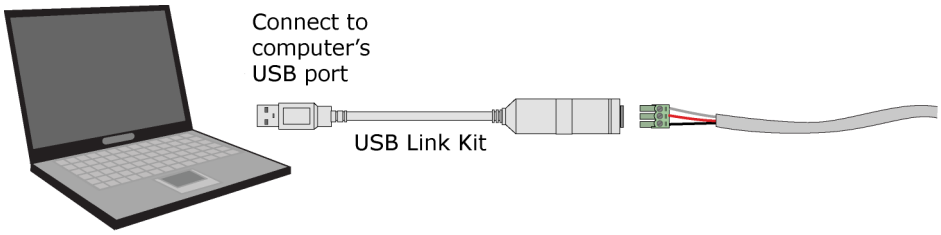

NOTE If using a USB isolator, plug the isolator into your computer's USB port, and then plug the USB Link Kit cable into the isolator.

To set up a Local Access connection in the WebCTRL® interface

For the WebCTRL® application to communicate with the **Rnet** port, you must do the following:

1 On the **System Configuration** tree, select **Connections**.

2 On the **Configure** tab, click **Add**.

3 From the **Type** drop-down list, select **BACnet/Rnet Connection**.

4 Optional: Edit the **Description**.

5 Type the computer's **Port** number that the USB cable is connected to.

NOTE To find the port number, plug the USB cable into the computer's USB port, then select **Start** > **Control Panel** > **System** > **Device Manager** > **Ports (Com & LPT)**. The COM port number is beside **Silicon Labs CP210x USB to UART Bridge**.

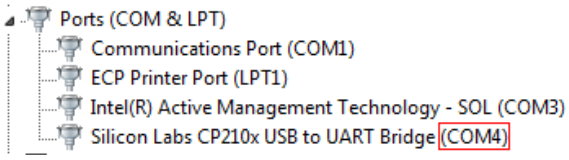

6 Set the **Baud** rate to 115200.

7 Click **Accept**.

8 On the **View** tab, select **BACnet/Rnet Connection**, from the drop-down list.

9 Click **Accept**.

10 On the **Configure** tab, select **BACnet/Rnet Connection**, then click **Start**.

NOTE If an error message appears, make sure the COM port you selected is not in use. For example, PuTTY may be open and is holding the port open.

11 On the **Network** tree, select the controller that you are connected to.

12 Click , then select **Manual Command**.

13 Type `rnet here` in the dialog box, then click **OK**.

14 On the **Properties** page, click **Module Status**. If a Modstat report appears, the WebCTRL® application is communicating with the controller.

Troubleshooting

If you have problems mounting, wiring, or addressing the OF1628, contact Automated Logic® Technical Support.

LEDs

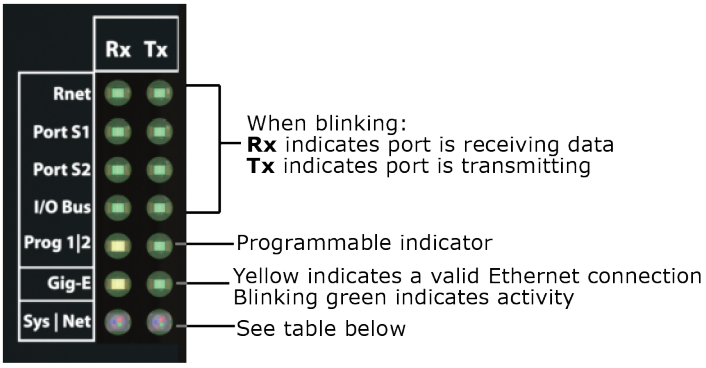

Net (Network Status) Tricolor LED

Color	Pattern	Condition	Message in Module Status	Possible Solutions
Red	On	Ethernet connection problem	No Ethernet Link	• Connect Ethernet Cable • Check other network components
Red	1 blink	One of the following BACnet/IP (Ethernet) DLL reporting issue: • Unable to create tasks • Unable to open socket for BACnet port	BACnet/IP error	Cycle power
Red	2 blink	Current default IP address does not match the current rotary switch setting	Default IP address mismatch	• Use the controller setup **Ports** tab to set the IP address • Cycle power to accept new IP address • Change rotary switches

Color	Pattern	Condition	Message in Module Status	Possible Solutions
				to match current default IP address
Blue	On	One of the following issues: • Port communication firmware did not load properly • Port communication firmware is not running • Invalid protocol selected	ARCNET/MSTP firmware error	• Change rotary switch to select valid protocol • Cycle power
Blue	1 blink	Invalid address selected for protocol	Invalid address selection for ARCNET/MSTP	Change rotary switch to valid address
Blue	2 blink	Controller has same MAC address as another connected device	Duplicate address on MSTP	Change rotary switch to unique address
Blue	3 blink	Controller is the only device on the network	No other devices detected on ARCNET/MSTP	• Check that network cable is connected properly • Check that baud rate is correct
Blue	4 blink	Excessive errors detected over 3 second period	Excessive communication errors on ARCNET/MSTP	• Check that network cable is connected properly • Check that baud rate is correct
Blue	5 blink	ARCNET traffic overload possibly due to circular route or excessive COVs (change of values)	Event System Error - FPGA RX FIFO full	• Check the network configuration for a circular route • Increase the time between COVs to reduce excessive COV traffic
Green	On	All enabled networks are functioning properly	No errors	No action required
Purple		Operating system changes are downloading **WARNING** This process could take several minutes. Do NOT power off the controller during the download.	N/A	No action required

Sys (System Status) Tricolor LED

Color	Pattern	Condition	Message in Module Status	Possible Solution
Red	2 blink	Restarting after an abnormal exit	Auto restart delay due to system error on startup	After 5 minute delay has expired, if condition occurs again then cycle power
Red	4 blink	Firmware image is corrupt	Firmware error	Download driver again
Red	Fast blink	Firmware error has caused the firmware to exit and restart	Fatal error detected	No action required
Green	1 blink	No errors	Operational	No action required
Green	2 blink	Download of driver is in progress	Download in progress	No action required
Green	3 blink	BACnet Device ID is not set	Download required	Download the controller
Green	Fast blink	Installation of recently downloaded driver is occurring	N/A	No action required
Blue	On	Controller is starting up	N/A	No action required
Blue	Slow blink	Linux (operating system) is starting up	N/A	No action required
Blue	Fast blink	Linux is running but it could not start the firmware application	N/A	Download driver
Purple		Operating system changes are downloading **WARNING** This process could take several minutes. Do NOT power off the controller during the download.	N/A	No action required

To configure custom Prog 1/2 LEDs

You can customize the **Prog 1** and/or **Prog 2** LED for site-specific purposes by configuring the BACnet Analog Output (BAO) microblock.

Open your control program in the EIKON® interface, select the AO microblock for each LED, and use the following settings:

Status/Attribute	Microblock type	Expander number : Channel number	I/O type	Description
LED 1	BAO	0:61	Special	• <=0 Normal • >15 On The number of blinks equals the Present Value. The pulse pattern repeats after a 2-second delay LED will blink the number of times given in the BAO with ON pulse 0.5 seconds and OFF pulse 0.5 seconds.
LED 2	BAO	0:62	Special	• <=0 Normal • >15 On The number of blinks equals the Present Value. The pulse pattern repeats after a 2-second delay LED will blink the number of times given in the BAO with ON pulse 0.5 seconds and OFF pulse 0.5 seconds.

To get a Module Status report

A Module Status report provides information about the controller and verifies proper network communication with the controller. You can get this report:

- In the WebCTRL® application—Right-click the controller on the **Network** tree, then select **Module Status**.
- In the WebCTRL® application—Select the controller on the **Network** tree. On the **Properties** page, click **Module Status**.
- On the controller setup **ModStat** tab—See *To set up the controller through the Service Port* (page 53).

See *Appendix - Module Status field descriptions* (page 71).

Troubleshooting inputs and outputs

The WebCTRL® interface shows if you have I/O errors resulting from:

- A misconfigured microblock
- A misconfiguration on the expander
- A missing or disconnected expander

To check for errors:

1 In the WebCTRL® **Geographic** or **Network** tree, select the equipment controlled by the OptiFlex™ BACnet Building Controller.

2 On the **Properties** page, select the **I/O Points** tab.

3 Click the **Name** of any input or output whose name is red (indicates an error) to open its dialog box.

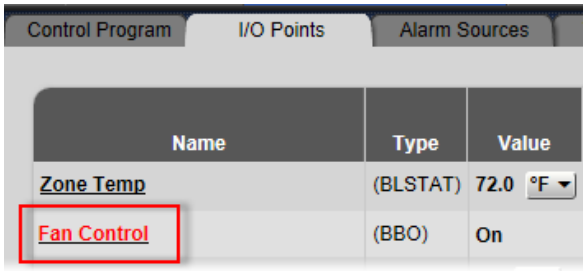

4 On the **Details** tab, scroll down to see the **Reliability** field under **BACnet Configuration**.

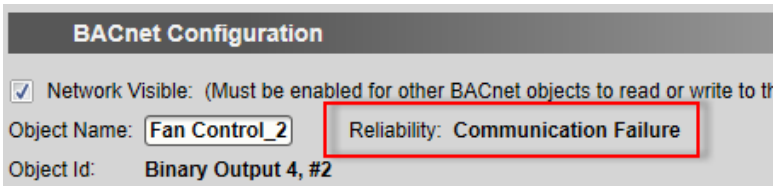

5 Anything other than **No Fault Detected** indicates an error. See the table below to determine the error and possible actions to take.

Reliability description	Possible error	Verify that...
Configuration Error	• The microblock's **I/O Type** and **Sensor/Actuator Type** are not compatible.	• The **I/O Type** and **Sensor/Actuator Type** combination is valid for the I/O number and microblock type.
	• The output's DIP switch setting does not match the connected device.	• The DIP switch setting is appropriate for the output and microblock type.
	• Invalid expander address or I/O number.	• The expander is present and functional at the address shown in the WebCTRL® interface and that I/O number is valid.
Over Range	• Input exceeds the **Min/Max** limits.	• The input is within the **Min/Max** limits.
No Output	• Output's **Hand-Auto-Off** switch is in **Hand** or **Off** position.	• The **Hand-Auto-Off** switch is in the **Auto** position.

Reliability description	Possible error	Verify that...
No Sensor	• No device is attached to the output.	• The device is present and functioning.
Shorted Loop	• Internal voltage feedback does not correspond with commanded value.	• The load on the output is within the valid range. • A voltage/current source has not been connected to an output.
Open Loop	• Internal current feedback does not correspond with commanded value.	• The load on the output is within the valid range. • A voltage/current source has not been connected to an output.
Unreliable Other	• Feedback does not correspond with commanded value (for example, the output relay is not in commanded state).	• Device may be faulty. Contact Automated Logic® Technical Support.

To monitor power input type

To monitor power inputs, add BACnet Analog Input (AI) and/or Binary Input (BI) microblocks to the control program. This enables you to view:

- Input power type (AC or DC)
- Input power frequency when AC power is applied (50 or 60 Hz)
- Fault on auxiliary power outputs (+12V and +24V)
- Input power state (low voltage/normal)

  WARNING You **must not** use this value as an input in a control program, as it could damage the controller or controlled equipment. The value must only be trended.

  Changes to the power demands of the controller, such as output state, input power requirements, peripheral current draw, etc., can impact the reading, which results in a potential feedback loop and output cycling.

  The Input power state does not take all factors into account, which could result in an incomplete evaluation of conditions. You must only use these values for troubleshooting and not for equipment logic.

In the EIKON® application, select the following for each AI / BI:

Status/Attribute	Microblock type	Expander number : Channel number	I/O type	Description
Input Power State	AI	0:51	Special	• 0-Normal • 1-low input voltage
Input Power Type	BI	0:52	Special	• False - AC • True - DC

Status/Attribute	Microblock type	Expander number : Channel number	I/O type	Description
Input Power Frequency	BI	0:53	Special	• False – 50 Hz • True – 60 Hz
Fault status of +12V Aux power (Rnet)	BI	0:55	Special	Returns fault status on +12V auxiliary power signal. Fault events such as under voltage, over voltage, overload, reverse current and thermal shutdown conditions • False – No fault • True – Fault
Fault status of +24V Aux power	BI	0:56	Special	Returns fault status on +24V auxiliary power signal. Fault events such as under voltage, over voltage, overload, reverse current and thermal shutdown conditions • False – No fault • True – Fault

To get a Device Log

If Automated Logic® Technical Support instructs you to get the controller's Device Log containing diagnostic information for troubleshooting:

1 Select the OF1628 in the WebCTRL® **Network** tree.

2 On the **Properties** page, click **Device Log**.

NOTE You can click **Device Log Archive** to download a file containing multiple Device Logs to your computer. This also contains any network packet captures that have been run from the *Network Diagnostics - Packet Captures* (page 46) driver page.

To get the OF1628's serial number

If you need the controller's serial number when troubleshooting, the number is on:

- A Module Status report (Modstat) under **Core** (or **Main**) **board hardware**

- A laser-etched number and QR code on the inside circuit board.
- A QR code, serial number and MAC address printed on a sticker on the cover

See *To get a Module Status report* (page 64).

To replace the OF1628's fuses

The OF1628 has 2 fuses:

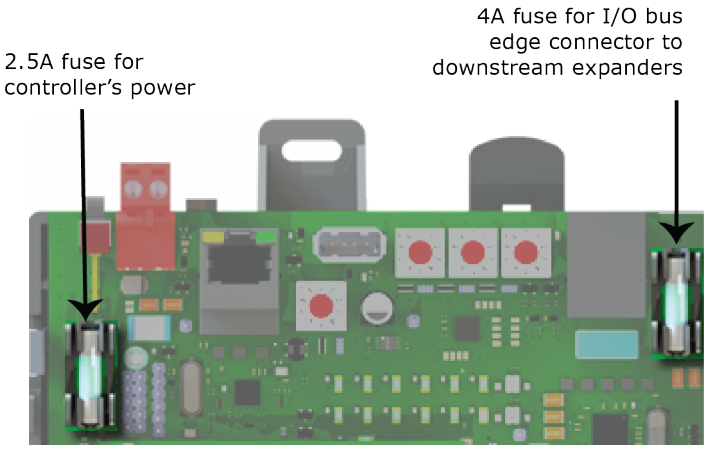

Symptoms of a blown fuse:

- OF1628's power fuse—The controller's LED is not lit.
- I/O bus edge connector fuse—The LED is not lit on downstream expanders connected to the edge connector.

NOTE If the OF1628's power fuse blows but not the I/O bus edge connector fuse, the OF1628 will be off but not the downstream expanders.

If you suspect a fuse is blown, remove the fuse as described below, and use a multimeter to check it. If the fuse is blown, try to determine why it blew before you replace it. Check the power wiring polarity of the OF1628 and any other devices that share the power supply. Use the same polarity for all of them.

The fuses are fast-acting, 5mm x 20mm glass fuses that you can purchase from one of the following vendors:

Manufacturer	Mfr. Part # for 2.5A fuse	Mfr. Part # for 4A fuse
Littelfuse	021702.5HXP	0217004.HXP
Bussmann	not specified	S500-4-R
Belfuse	5SF-2.5-R	5SF 4-R
Optifuse	FSD-2.5A	FSD-4A

To replace the fuse:

1. Turn off the OF1628's power switch.
2. Remove the red power connector.
3. Remove the blue output connectors, if present.

4 On both ends of the OF1628, insert a small flathead screwdriver as shown below, and then gently pry up the cover until it is released from the base.

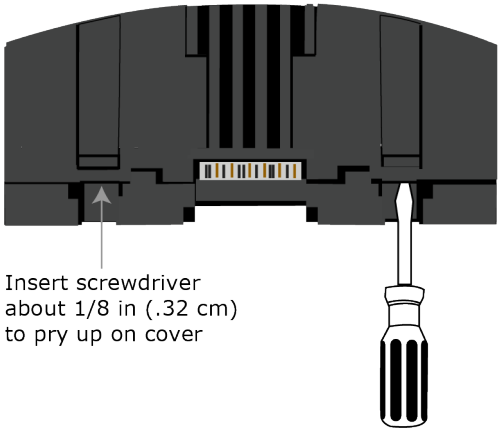

5 Remove the cover from the base.
6 Remove the blown fuse.
7 Snap the new fuse into the fuse holder.
8 Replace the OF1628's cover.
9 Replace the power connector and the output connectors.
10 Turn on the OF1628's power switch.
11 Verify the LEDs on the OF1628 and any downstream expanders are lit.

To take the OF1628 out of service

If needed for troubleshooting or start-up, you can stop communication between the WebCTRL® application and the OF1628.

1 On the WebCTRL® **Network** tree, select the OF1628.
2 On the **Properties** page, check **Out of Service**.
3 Click **Accept**.

To revert to default settings

WARNING This erases all archived information and user-configured settings. When recovery is complete, you must connect locally to the OF1628 and manually reconfigure all of the BACnet, IP, and firewall information once the recovery is complete. We highly recommend that you revert the default settings only under the guidance of Automated Logic® Technical Support.

1 Copy the newest driver to the root directory of a FAT32-formatted USB flash drive.

   NOTE To verify that you have the driver's latest version, go to http://accounts.automatedlogic.com/download, then select **Drivers** > **Controllers**. Compare the latest version to the OF1628's driver in SiteBuilder.

2 Remove power from the OF1628.
3 Set the rotary switches to **911**.

4 Apply power to theOF1628.

NOTE The **Sys** and **Net** LEDs change to purple after the boot sequence.

5 Plug the USB drive into the controller's USB port.

NOTES

- The **Sys** LED blinks faster when recovery is in progress.
- When the **Sys** LED turns solid green, the process is complete.

6 Remove power from the OF1628.

7 Remove the USB drive from the USB port.

8 Set the rotary switches back to the normal address.

9 Apply power to the OF1628.

NOTE The controller is now running the new version of the firmware and is in the default state.

10 Configure the IP address and all other necessary parameters.

Compliance

FCC Compliance

This device complies with Part 15 of the FCC Rules. Operation is subject to the following two conditions:

1 This device may not cause harmful interference.

2 This device must accept any interference received, including interference that may cause undesired operation.

IMPORTANT Any changes or modifications not expressly approved by manufacturer could void the user's authority to operate the equipment.

NOTE This equipment has been tested and found to comply with the limits for a Class B digital device, pursuant to Part 15 of the FCC Rules. These limits are designed to provide reasonable protection against harmful interference when the equipment is operated in a residential installation. This equipment generates, uses, and can radiate radio frequency energy, and if it is not installed and used in accordance with this document, it may cause harmful interference to radio communications. However, there is no guarantee that interference will not occur in a particular installation. If this equipment does cause harmful interference to radio or television reception, which can be determined by turning the equipment off and on, the user is encouraged to try to correct the interference by one or more of the following measures:

- Reorient or relocate the receiving antenna.
- Increase the separation between the equipment and receiver.
- Connect the equipment into an outlet on a circuit different from that to which the receiver is connected.
- Consult the dealer or an experienced radio/TV technician for help.

CE Compliance

WARNING This is a light industrial product. In a domestic environment, this product may cause radio interference in which case the user may be required to take adequate measures.

Industry Canada Compliance

This Class A digital apparatus complies with Canadian ICES-003.
Cet appareil numérique de la classe A est conforme à la norme NMB-003 du Canada.

BACnet Compliance

Compliance of listed products to requirements of ASHRAE Standard 135 is the responsibility of BACnet International. BTL® is a registered trademark of BACnet International.

Appendix - Module Status field descriptions

Field	Description
Date/Time	Date and time the Modstat was run
CM	The controller's rotary switch address (MAC address)
Model Name	Identifies the Product Type
Device Instance	A unique ID assigned to the controller
Driver built	When the driver was built
Downloaded by	When and where the last download was performed
Application Software Version	The name of the first control program that is downloaded
Data Partition Version	Not applicable to this device.
# PRGs initialized # PRGs running	If applicable, the number of control programs that were downloaded vs. the number that are running. If these numbers are not the same, the controller has a problem such as lack of memory.
Driver version	The name, version, and date of the driver, as well as all the bundles and versions.
Reset Counters:	The number of times each of the following events have occurred since the last time the controller was commanded to clear the reset counters. See **NOTE** below this table.
Power failures	Interruption of incoming power
Commanded boots	Includes commands issued from the WebCTRL® interface such as the zap manual command, plus commands issued during a memory download.
System errors	Error in the controller's firmware or hardware

Field	Description
S/W Watchdog timeouts	Watchdog is firmware that monitors the application firmware for normal operation. If the watchdog firmware detects a problem, it restarts the application firmware.
H/W Watchdog timeouts	H/W Watchdog will restart the controller if it detects a severe problem with the controller's operating system
System status	Gives the current status of the controller's operation. See *LEDs* (page 61) for all possible conditions.
Network status	Gives the current status of the controller's networks. See *LEDs* (page 61) for all possible conditions.
System error message history	High-severity errors since the last memory download. Shows the most recent 10 messages. See **NOTE** below this table.
Warning message history	Low-severity errors and warning messages since the last memory download. Shows the most recent 10 messages. See **NOTE** below this table.
Information message history	Information-only messages since the last memory download. Shows the most recent 10 messages. See **NOTE** below this table.
ARC156 reconfigurations during the last hour	An ARCNET network normally reconfigures itself when a controller is added to or taken off the network. The **Total** field indicates the number of reconfigurations in the last hour. **Initiated by this node** indicates the number of reconfigurations initiated by this controller. Typical sources of the problem could be this controller, the controller with the next lower rotary switch address, any controller located on the network between these two controllers, or the wiring between these controllers. An excessive number in these fields indicates a problem with the network.
Core and Base board hardware	Gives the following information about the controller's boards: • Type and board numbers that are used internally by Automated Logic®. • The manufacture date and serial number.
Number of BACnet Objects	The number of BACnet objects that were created in the device and the number of those objects that are network visible.
Database Partition	**Non-Volatile** partition (16 MB maximum) contains data that needs to be preserved through a power cycle and archived to flash such as parameters and trend data. **Volatile** partition (6 MB maximum) contains data that does not need to be preserved through a power cycle such as status values that are calculated during runtime.
IP Networks - BBMDs	Shows the following information for each active IP network: **BBMD Active** shows whether the BACnet Broadcast Management Device is currently active (1) or inactive (0). **BBMD Entries**—the number of entries in the BBMD table (500 maximum). **FDT Entries**—the number of entries in the Foreign Device Table (500 maximum).

Field	Description
Third party integration points	Shows number of points used.
Network Information	The various network addresses for the controller. The **Current** and **Assigned** addresses will be the same unless the **Enable IP configuration changeover** on the **BACnet Router Properties** page is being implemented.
Statistics and Network Activity	Shows network communication statistics to assist with troubleshooting. See *Network Diagnostics - Statistics* (page 43) for more information.
Route Information Port Number	BACnet networks that a router is currently routing traffic to. The list changes as BACnet routers are added or removed from the system.

NOTE If you want to clear the Reset counters and the three message history fields, click the **Clear Counts/Logs** button on the controller's **Properties** page in the WebCTRL® application or in the controller setup **Device** tab.

Document revision history

Important changes to this document are listed below. Minor changes such as typographical or formatting errors are not listed.

Date	Topic	Change description	Code*
3/31/20	Specifications, Downloading the OF1628	Changed number of programs from 99 to 999	A-PM-KC-E-KC

* For internal use only